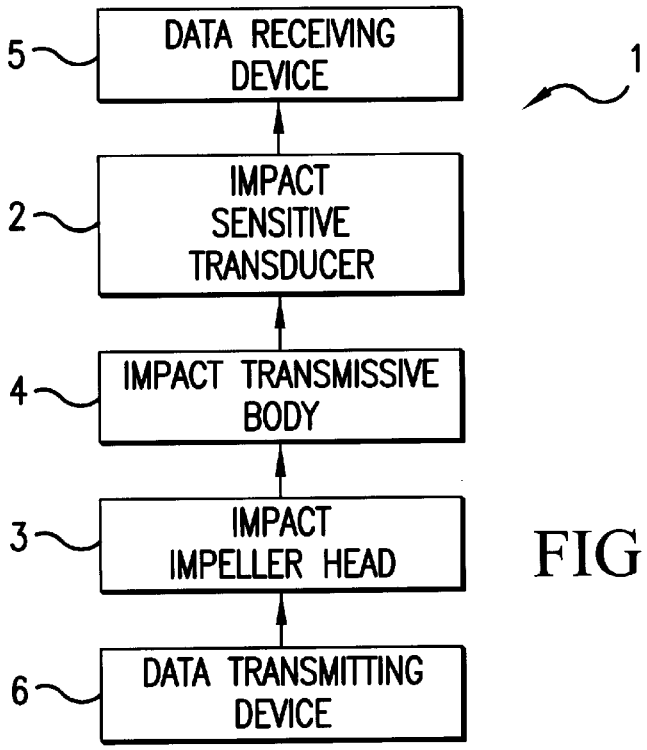
5
DATA RECEIVING DEVICE
1
2
IMPACT SENSITIVE TRANSDUCER
4
IMPACT TRANSMISSIVE BODY
3
IMPACT IMPELLER HEAD
6
DATA TRANSMITTING DEVICE

FIG.1

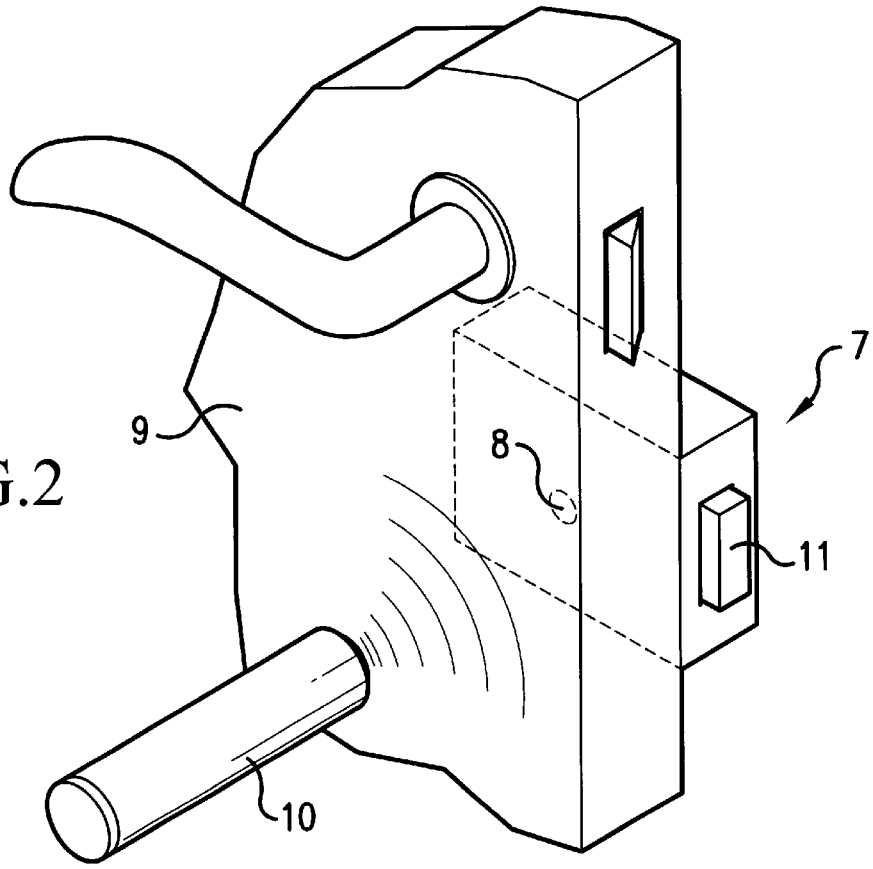
7
9
8
11
10

FIG.2