US009409195B2

(12) **United States Patent**
DeJong et al.

(10) **Patent No.: US 9,409,195 B2**
(45) **Date of Patent: Aug. 9, 2016**

(54) **TRIGGER SPRAYER VALVES**

(75) Inventors: **David L. DeJong**, Ogden, UT (US); **Steven L. Sweeton**, Lake Winnebago, MO (US); **Joseph K. Dodd**, Lee's Summit, MO (US)

(73) Assignee: **WestRock Dispensing Systems, Inc.**, Norcross, GA (US)

(*) Notice: Subject to any disclaimer, the term of this patent is extended or adjusted under 35 U.S.C. 154(b) by 856 days.

(21) Appl. No.: **13/405,456**

(22) Filed: **Feb. 27, 2012**

(65) **Prior Publication Data**

US 2012/0261438 A1 Oct. 18, 2012

Related U.S. Application Data

(60) Provisional application No. 61/474,888, filed on Apr. 13, 2011.

(51) **Int. Cl.**
B67D 7/58 (2010.01)
B05B 11/00 (2006.01)

(52) **U.S. Cl.**
CPC ***B05B 11/3011*** (2013.01); ***B05B 11/3016*** (2013.01); ***B05B 11/3069*** (2013.01); ***B05B 11/3077*** (2013.01)

(58) **Field of Classification Search**
USPC 222/383.1, 340, 341, 380
See application file for complete search history.

(56) **References Cited**

U.S. PATENT DOCUMENTS

4,191,313	A	*	3/1980	Blake et al.	222/335
4,489,861	A	*	12/1984	Saito et al.	222/207
4,596,344	A		6/1986	Corsette	
5,318,206	A	*	6/1994	Maas et al.	222/383.1
5,425,482	A	*	6/1995	Foster et al.	222/207
5,467,900	A		11/1995	Maas	
5,522,547	A		6/1996	Dobbs	
5,553,752	A	*	9/1996	Foster et al.	222/340
5,730,335	A		3/1998	Maas	
5,806,724	A		9/1998	Foster	
5,984,149	A	*	11/1999	Thanisch et al.	222/340
6,131,820	A		10/2000	Dodd	
6,364,172	B1	*	4/2002	Maas et al.	222/383.1
6,364,175	B2	*	4/2002	Bloom	222/383.1
7,175,056	B2	*	2/2007	Buti	222/383.1
7,775,405	B2		8/2010	Sweeton	
2004/0222243	A1	*	11/2004	Sweeton	222/383.1
2008/0230563	A1	*	9/2008	Maas et al.	222/383.1

FOREIGN PATENT DOCUMENTS

EP	0798050	10/1997
WO	WO2011128787 A1	10/2011

* cited by examiner

Primary Examiner — Nicholas J Weiss
(74) *Attorney, Agent, or Firm* — WestRock Intellectual Property Group

(57) **ABSTRACT**

A trigger sprayer having a valve body configured to accept a discharge valve for a pre-compression configuration or a valve and plug combination for a non-pre-compression configuration where the discharge valve may include a frame and valve which may be bi-injected or assembled to provide a pre-compression valve for the trigger sprayer.
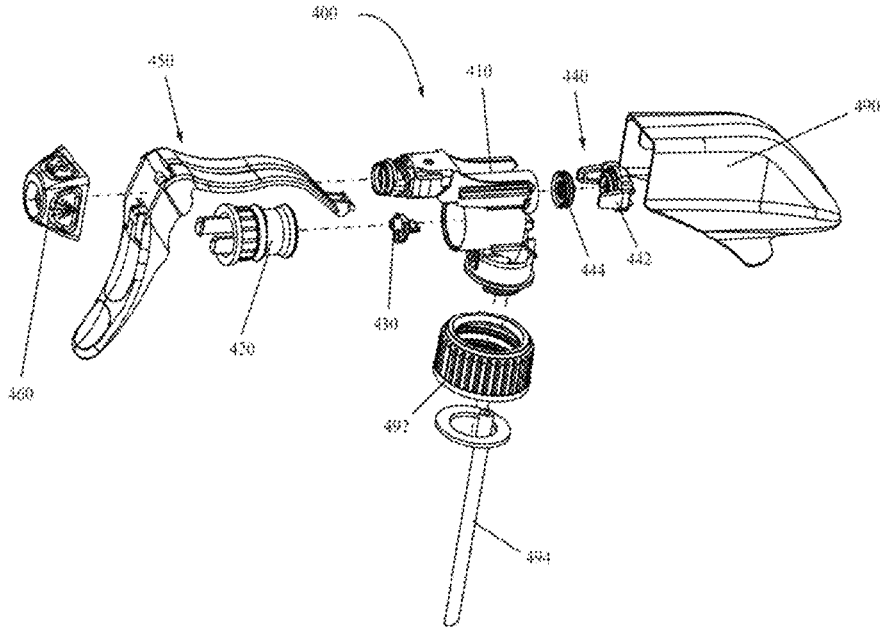
11 Claims, 24 Drawing Sheets