Oct. 31, 1961 B. G. MILLER 3,006,495

CONSTRUCTION TAPE APPARATUS

Filed Dec. 12, 1958

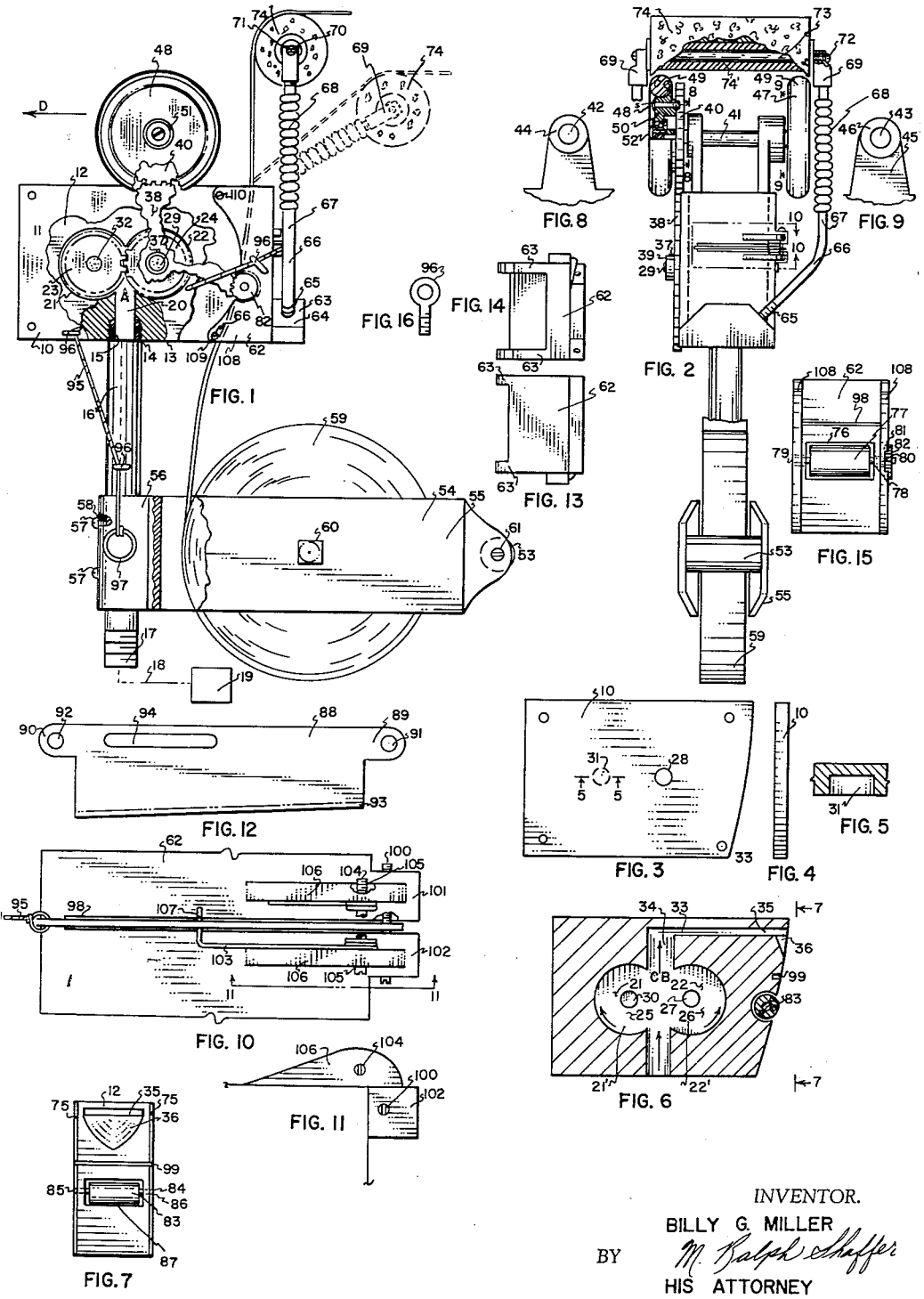

INVENTOR.
BILLY G. MILLER
BY M. Ralph Schaffer
HIS ATTORNEY