LIQUID APPLICATOR SYSTEM

Filed Oct. 24, 1966 2 Sheets-Sheet 1

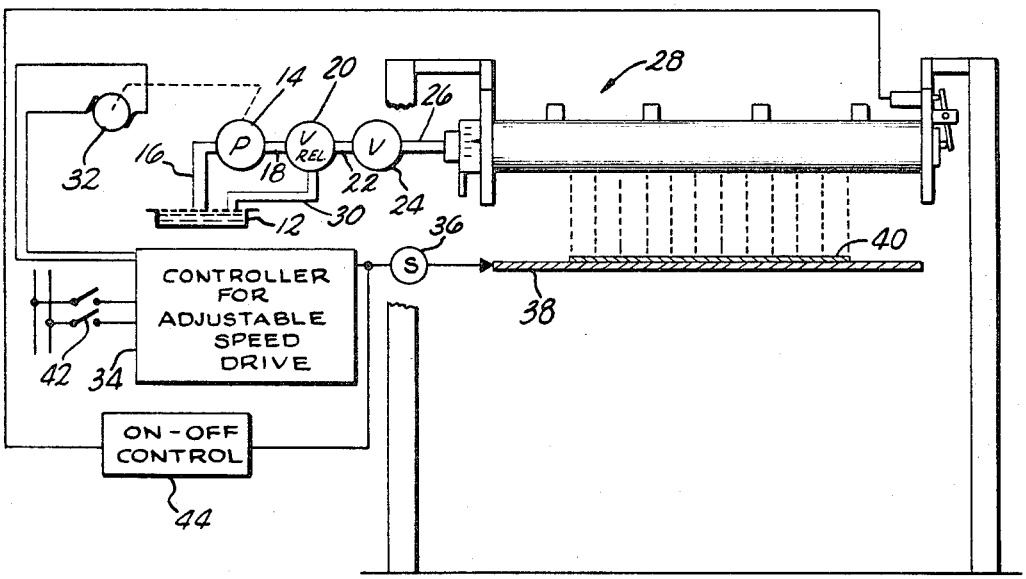

FIG. 1

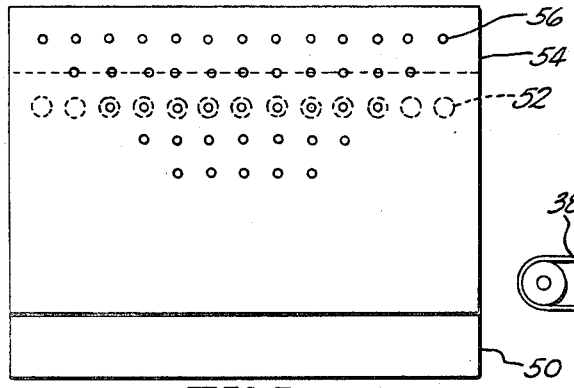

FIG. 7

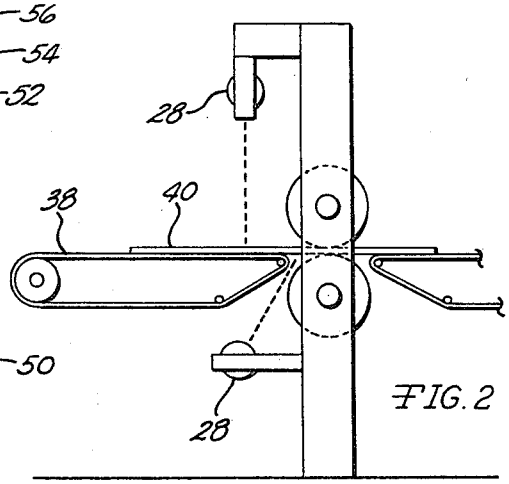

FIG. 2

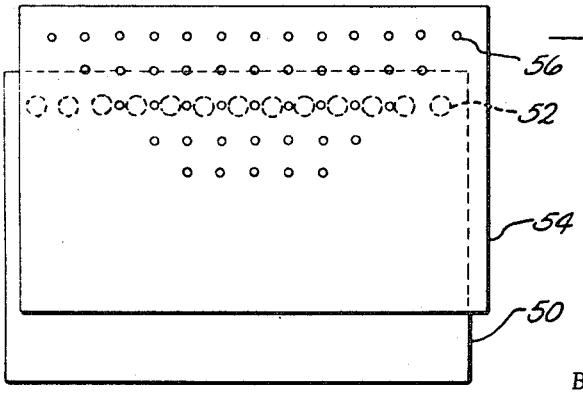

FIG. 8

INVENTORS
OWEN R. BAKER
ROBERT M. GUBBINS
RUDOLPH G. HENTSCHEL
BY Olsen and Stephenson
ATTORNEYS