US006295794B1

(12) **United States Patent**
Nordt et al.

(10) **Patent No.: US 6,295,794 B1**
(45) **Date of Patent: Oct. 2, 2001**

(54) **JOINT COMPOUND INCLUDING RECYCLED CONSTITUENTS AND METHOD AND SYSTEM FOR MAKING THE SAME**

(75) Inventors: **Frank Juergen Nordt**, Portland; **Jason A. Everett**, Wilsonville; **Duane L. Whipple**, Silverton; **David E. Spring**, Keizer, all of OR (US)

(73) Assignee: **Universal Forest Products, Inc.**, Grand Rapids, MI (US)

(*) Notice: Subject to any disclaimer, the term of this patent is extended or adjusted under 35 U.S.C. 154(b) by 0 days.

(21) Appl. No.: **09/227,788**

(22) Filed: **Jan. 8, 1999**

Related U.S. Application Data

(60) Provisional application No. 60/071,092, filed on Jan. 9, 1998.

(51) **Int. Cl.**[7] **B65B 3/04**; B32B 35/00

(52) **U.S. Cl.** **53/467**; 106/783; 106/786; 241/14; 241/27; 141/94; 156/94

(58) **Field of Search** 53/131.1, 411, 53/416, 452, 467; 106/772, 773, 783, 784, 785, 786; 241/14, 24.21, 79, 79.2, 27; 141/94; 156/94, 344, 584

(56) **References Cited**

U.S. PATENT DOCUMENTS

898,451		9/1908	Eastwick .	
1,937,292		11/1933	Moore .	
3,658,564		4/1972	Gerow et al. .	
3,682,670		8/1972	Rustan .	
3,782,986		1/1974	Vincent .	
3,841,886		10/1974	Burr .	
4,016,240		4/1977	Hinsche et al. .	
4,049,866	*	9/1977	Lane et al.	106/784
4,287,103	*	9/1981	Francis et al.	106/782
4,443,261		4/1984	Nordqvist .	
4,454,267		6/1984	Williams .	
4,523,954		6/1985	Pichat et al. .	
4,657,594		4/1987	Struss .	
4,686,253		8/1987	Struss et al. .	
5,079,042		1/1992	Frings .	
5,100,063		3/1992	Bauer .	
5,102,462		4/1992	Podlas .	
5,155,959		10/1992	Richards et al. .	
5,171,366		12/1992	Richards et al. .	
5,183,213		2/1993	Knez, Jr. .	
5,230,200		7/1993	Douglas et al. .	
5,238,195		8/1993	Knez, Jr. .	
5,240,500		8/1993	Retti .	
5,277,712		1/1994	McInnis .	
5,304,276	*	4/1994	MacLeod et al.	156/344
5,323,588	*	6/1994	Zak et al.	53/131.1
5,324,501		6/1994	Koehnk et al. .	
5,413,284		5/1995	Hirz et al. .	
5,433,388		7/1995	Hirz et al. .	
5,534,059		7/1996	Immordino, Jr. .	
5,577,672		11/1996	Holmes .	
5,593,096		1/1997	Harker et al. .	
5,630,556		5/1997	Chrestenson .	
5,653,797		8/1997	Patel .	
5,746,822	*	5/1998	Espinoza et al.	106/785

* cited by examiner

Primary Examiner—Peter Vo
Assistant Examiner—Louis K. Huynh
(74) *Attorney, Agent, or Firm*—Rader, Fishman, Grauer & McGarry an Office of Rader, Fishman & Grauer PLLC

(57) **ABSTRACT**

A composition of matter for joint or texture compound used in wallboard applications which incorporates an ingredient which has been reclaimed from waste wallboard panel. A method and system for reconstituting the waste wallboard into the joint compound is also provided. Waste wallboard is thereby recycled so that the waste wallboard does not need to be disposed in a landfill.
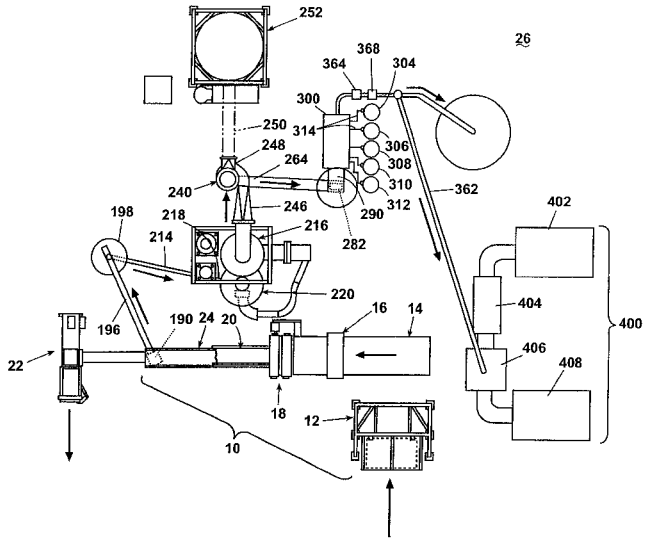
47 Claims, 10 Drawing Sheets