United States Patent

[11] 3,583,794

[72] Inventor **Joel S. Newman**
Framingham, Mass.

[21] Appl. No. **806,781**
[22] Filed **Mar. 10, 1969**
[45] Patented **June 8, 1971**
[73] Assignee **Biometrics, Inc.**
Cambridge, Mass.

[54] **DIRECT READING EYE MOVEMENT MONITOR**
15 Claims, 8 Drawing Figs.

[52] **U.S. Cl.** **351/6,** 351/7
[51] **Int. Cl.** **A61b 3/10,** A61b 3/14
[50] **Field of Search** 351/6, 7, 1, 39

[56] **References Cited**

UNITED STATES PATENTS

2,964,644	12/1960	Hobrough	351/7UX
3,450,466	6/1969	Streisinger	351/7
3,462,604	8/1969	Mason	351/6X
3,473,868	10/1969	Young et al.	351/6

Primary Examiner—David Schonberg
Assistant Examiner—Paul A. Sacher
Attorney—Wolf, Greenfield and Sacks
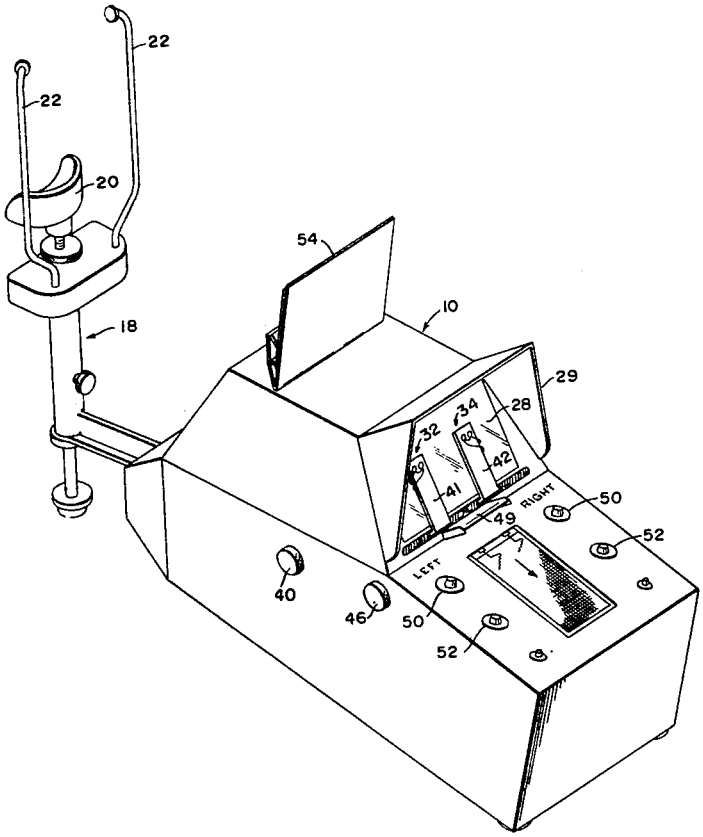
ABSTRACT: A direct reading eye position and movement monitor with a lens system for projecting images of the eyes of the subject on a screen, a signal generator or transducer assembly directed at the interface of two portions of the eyes with distinctly different light reflecting properties, and a two-channel recorder connected to the output of the transducer assembly to record the separate output signals generated as a result of movement of the eyes of the subject.