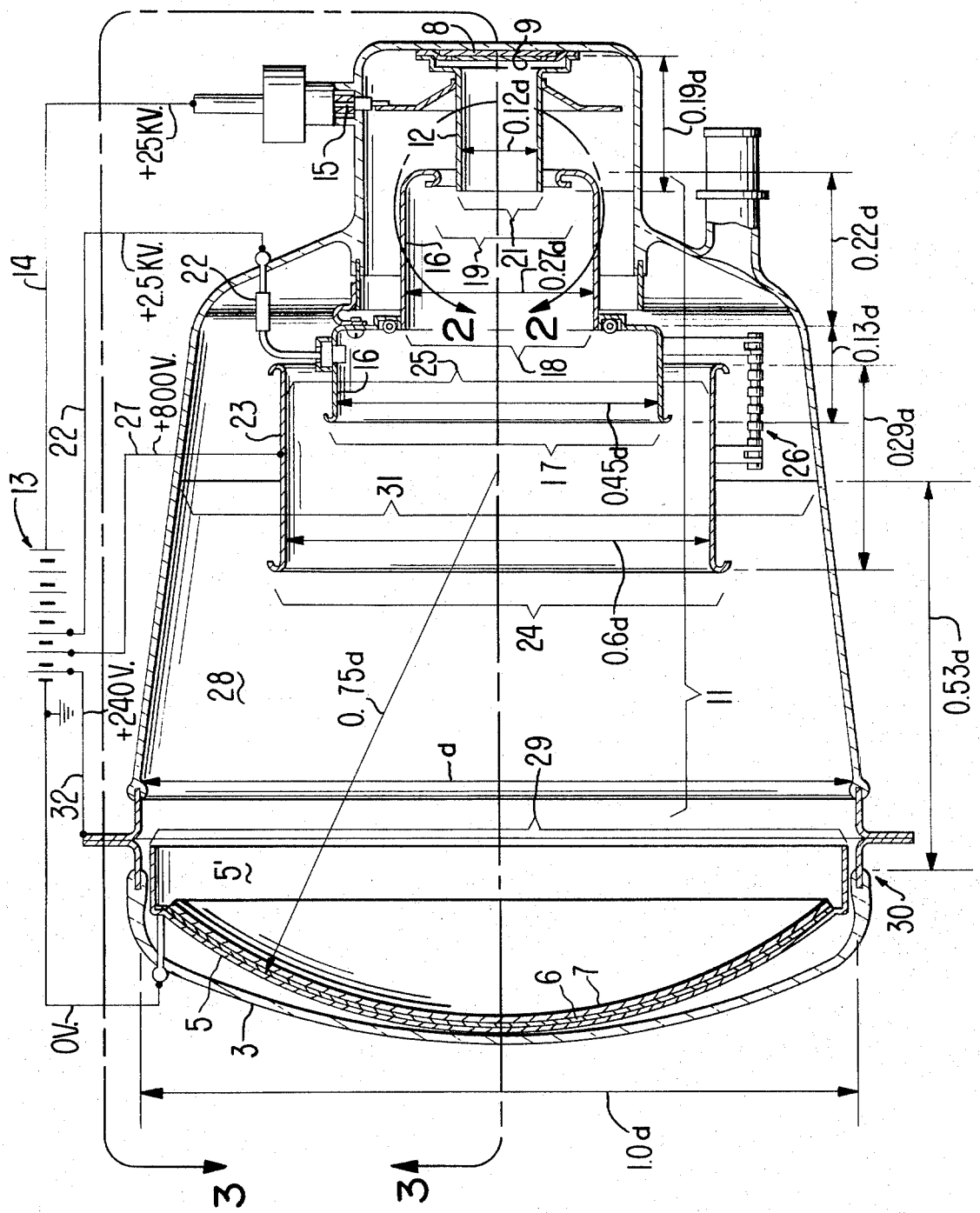

FIG. 1

INVENTORS
NATHAN D LEVIN
ANDREAS NIEWOLD
WILFRID F. NIKLAS
BY Gerald L Moore
ATTORNEY