US009680094B2

(12) **United States Patent**
Fujii et al.

(10) **Patent No.: US 9,680,094 B2**
(45) **Date of Patent: Jun. 13, 2017**

(54) **MEMORY DEVICE AND METHOD FOR MANUFACTURING THE SAME**

(71) Applicants: **Shosuke Fujii**, Kanagawa-ken (JP); **Takashi Haimoto**, Tokyo (JP)

(72) Inventors: **Shosuke Fujii**, Kanagawa-ken (JP); **Takashi Haimoto**, Tokyo (JP)

(73) Assignee: **Kabushiki Kaisha Toshiba**, Tokyo (JP)

(*) Notice: Subject to any disclaimer, the term of this patent is extended or adjusted under 35 U.S.C. 154(b) by 0 days.

(21) Appl. No.: **13/716,347**

(22) Filed: **Dec. 17, 2012**

(65) **Prior Publication Data**

US 2014/0061570 A1 Mar. 6, 2014

Related U.S. Application Data

(60) Provisional application No. 61/695,075, filed on Aug. 30, 2012.

(51) **Int. Cl.**
H01L 45/00 (2006.01)
H01L 27/24 (2006.01)

(52) **U.S. Cl.**
CPC ***H01L 45/1266*** (2013.01); ***H01L 27/2472*** (2013.01); ***H01L 27/2481*** (2013.01); ***H01L 45/085*** (2013.01); ***H01L 45/126*** (2013.01); ***H01L 45/1233*** (2013.01); ***H01L 45/148*** (2013.01); ***H01L 45/16*** (2013.01)

(58) **Field of Classification Search**
CPC H01L 45/04; H01L 45/08; H01L 45/085; H01L 45/1253; H01L 45/1266; H01L 45/1233; H01L 27/2463; H01L 27/2409; H01L 27/2481; H01L 27/2472; G11C 13/0002; G02F 1/134309
USPC 257/2–4
See application file for complete search history.

(56) **References Cited**

U.S. PATENT DOCUMENTS

2002/0197935 A1* 12/2002 Mueller C09G 1/02 451/36
2006/0076549 A1* 4/2006 Ufert 257/3
2006/0285375 A1* 12/2006 Endo G11C 16/0483 365/63
2007/0205248 A1* 9/2007 Horng et al. 228/19
(Continued)

OTHER PUBLICATIONS

U.S. Appl. No. 14/022,732, filed Sep. 10, 2013, Ishikawa, et al.
(Continued)

Primary Examiner — Matthew Reames
Assistant Examiner — John Bodnar
(74) *Attorney, Agent, or Firm* — Oblon, McClelland, Maier & Neustadt, L.L.P.

(57) **ABSTRACT**

According to one embodiment, a memory device includes a first electrode, a first resistance change layer, a first insulating section, a second electrode and an intermediate layer. The first resistance change layer is provided on the first electrode. The first insulating section is provided on the first resistance change layer. The second electrode is provided on the first resistance change layer. The second electrode is in contact with the first resistance change layer. The intermediate layer is provided between the second electrode and the first insulating section. The intermediate layer is in contact with the second electrode and the first insulating section.
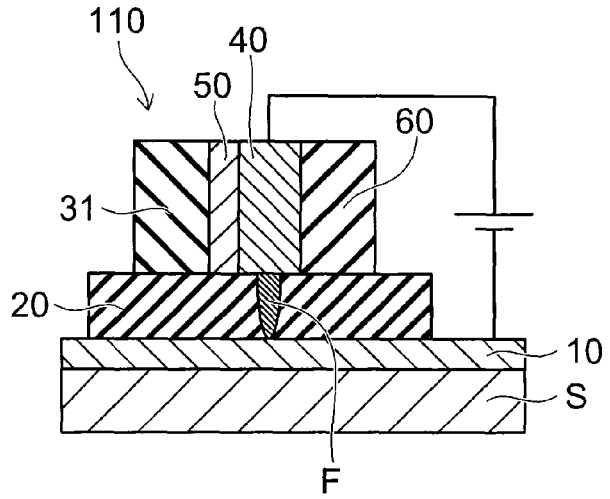
18 Claims, 23 Drawing Sheets