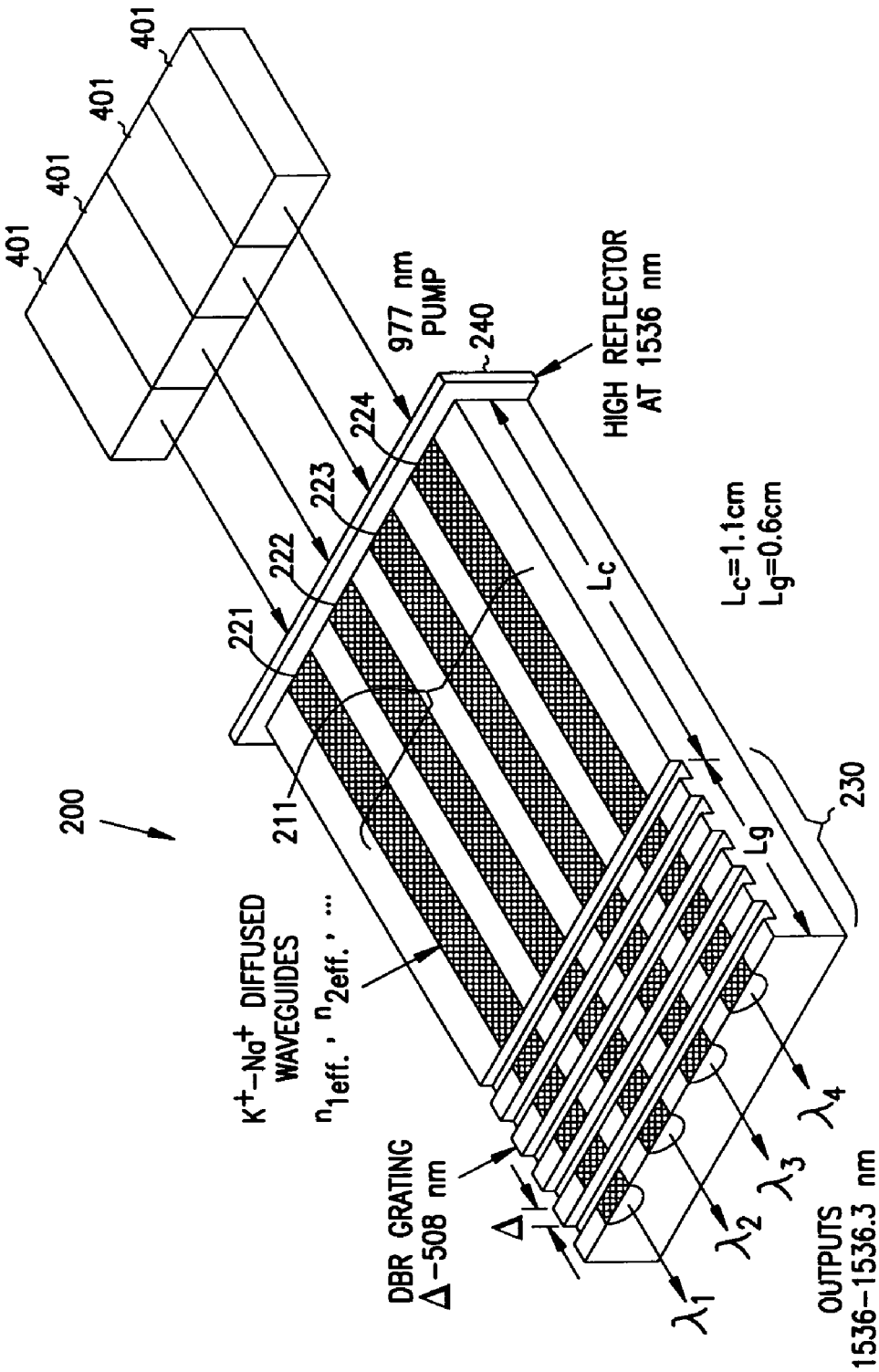
401
401
401
401
977 nm
PUMP
240
HIGH REFLECTOR
AT 1536 nm
224
223
222
221
Lc
Lc=1.1cm
Lg=0.6cm
200
211
Lg
230
K+-Na+ DIFFUSED
WAVEGUIDES
n1eff., n2eff., ...
DBR GRATING
Δ-508 nm
Δ
λ1
λ2
λ3
λ4
OUTPUTS
1536-1536.3 nm

FIG. 1-A1