US00D766894S

(12) **United States Design Patent**
Jeong

(10) **Patent No.: US D766,894 S**
(45) **Date of Patent: ** Sep. 20, 2016**

(54) **ROUTER**

(71) Applicant: **Ki Hyun Jeong**, Seoul (KR)

(72) Inventor: **Ki Hyun Jeong**, Seoul (KR)

(73) Assignee: **LG INNOTEK CO., LTD.**, Seoul (KR)

(**) Term: **14 Years**

(21) Appl. No.: **29/472,508**

(22) Filed: **Nov. 13, 2013**

(30) **Foreign Application Priority Data**

Jul. 1, 2013 (KR) 30-2013-0033832
Jul. 1, 2013 (KR) 30-2013-0033833
Jul. 1, 2013 (KR) 30-2013-0033834
Jul. 1, 2013 (KR) 30-2013-0033860
Jul. 1, 2013 (KR) 30-2013-0033866
Jul. 1, 2013 (KR) 30-2013-0033867
Jul. 1, 2013 (KR) 30-2013-0033868
Jul. 1, 2013 (KR) 30-2013-0033869
Jul. 1, 2013 (KR) 30-2013-0033870

(51) **LOC (10) Cl.** **14-02**

(52) **U.S. Cl.**
USPC **D14/358**

(58) **Field of Classification Search**
USPC ..... D14/240, 242, 358, 230–233, 496; D13/110, 123, 147, 184, 108, 107; 379/220.1, 221.09, 221.14, 338; 439/668, 717, 74; 709/250; D19/88–91; D11/200, 201; 24/67 R, 24/555, 556, 338
CPC G06F 1/16
See application file for complete search history.

(56) **References Cited**

U.S. PATENT DOCUMENTS

1,256,426 A * 2/1918 Baltzley 24/456
2,824,590 A * 2/1958 Anderson B42F 7/14 150/137
D229,033 S * 11/1973 Cooper D8/395
4,083,481 A * 4/1978 Selinko A45F 5/02 224/269
4,956,895 A * 9/1990 Hayasaka A44B 99/00 224/667
D312,617 S * 12/1990 Makita et al. D13/154
5,081,701 A * 1/1992 Silver G06F 13/423 710/105
5,261,122 A * 11/1993 Otsuki A45F 5/02 224/670
D343,383 S * 1/1994 Hall et al. D13/133
5,488,759 A * 2/1996 Lim A45F 5/02 24/3.12
5,495,644 A * 3/1996 Mesher ..... B42D 15/045 24/16 R
D384,106 S * 9/1997 Shinya D19/65
D401,930 S * 12/1998 Scalisi ..... D14/138 AB
D401,935 S * 12/1998 Scalisi ..... D14/138 AB
D416,562 S * 11/1999 Larson et al. D14/242
6,101,689 A * 8/2000 Jo A45F 5/02 24/332
D453,154 S * 1/2002 Åstradsson D14/240
D467,240 S * 12/2002 Ruohonen D14/205
6,547,201 B2 * 4/2003 Barich G11B 33/0411 206/228
6,752,299 B2 * 6/2004 Shetler A45F 5/02 224/197
D497,186 S * 10/2004 Cetera D19/88
D500,083 S * 12/2004 Chen et al. D19/65
D559,234 S * 1/2008 Girard D14/240
D566,537 S * 4/2008 Wen-Po D8/395
D587,682 S * 3/2009 Miles D14/205
D592,647 S * 5/2009 L'Henaff D14/240
D597,087 S * 7/2009 Herbst et al. D14/240
D601,961 S * 10/2009 Mahaffey D13/110
D608,628 S * 1/2010 Knuuttila D8/395
D613,273 S * 4/2010 Liner D14/223
D628,535 S * 12/2010 Cheng D13/108
D631,838 S * 2/2011 Cheng D13/108
D637,583 S * 5/2011 Beal et al. D14/217
D637,983 S * 5/2011 Kim et al. D14/125
D638,409 S * 5/2011 Walter D14/223
D638,854 S * 5/2011 Andre D14/496
D639,707 S * 6/2011 Caskey et al. D11/201
D644,221 S * 8/2011 Kemery D14/240
8,005,518 B1 * 8/2011 Birsel et al. 455/575.1
D651,208 S * 12/2011 Pacyga et al. D14/358
D698,340 S * 1/2014 Petersen et al. D14/240
D718,752 S * 12/2014 Wang D14/240
2007/0072657 A1 * 3/2007 Hyun et al. 455/575.3
2008/0104801 A1 * 5/2008 Yeh A45F 5/02 24/3.12
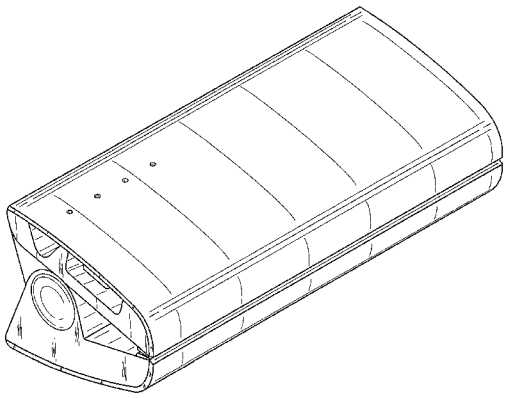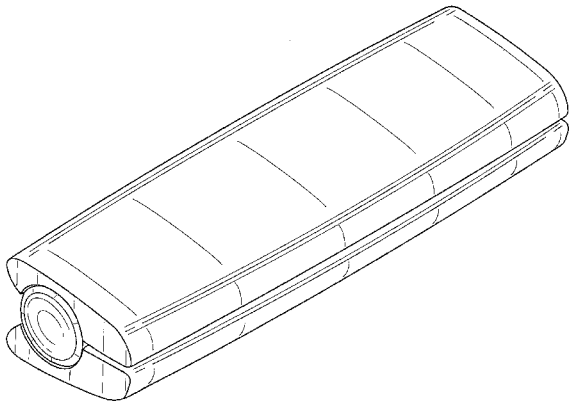
* cited by examiner