US009543394B2

(12) **United States Patent**
Jeong et al.

(10) **Patent No.: US 9,543,394 B2**
(45) **Date of Patent: Jan. 10, 2017**

(54) **QUANTUM ROD AND METHOD OF FABRICATING THE SAME**

(71) Applicant: **LG DISPLAY CO., LTD.**, Seoul (KR)

(72) Inventors: **Kyung-Seok Jeong**, Seoul (KR); **Gee-Sung Chae**, Incheon-si (KR); **Jin-Wuk Kim**, Goyang-si (KR); **Sung-Hee Cho**, Seoul (KR)

(73) Assignee: **LG Display Co., Ltd.**, Seoul (KR)

(*) Notice: Subject to any disclaimer, the term of this patent is extended or adjusted under 35 U.S.C. 154(b) by 0 days.

(21) Appl. No.: **14/947,825**

(22) Filed: **Nov. 20, 2015**

(65) **Prior Publication Data**

US 2016/0087047 A1 Mar. 24, 2016

Related U.S. Application Data

(62) Division of application No. 14/085,073, filed on Nov. 20, 2013, now Pat. No. 9,224,920.

(30) **Foreign Application Priority Data**

Nov. 23, 2012 (KR) 10-2012-0133815
Nov. 27, 2012 (KR) 10-2012-0135162

(51) **Int. Cl.**

H01L 29/225	(2006.01)
H01L 33/28	(2010.01)
H01L 29/12	(2006.01)
H01L 29/227	(2006.01)
B82Y 10/00	(2011.01)
B82Y 15/00	(2011.01)
B82Y 20/00	(2011.01)
H01L 29/06	(2006.01)

(Continued)

(52) **U.S. Cl.**

CPC ***H01L 29/225*** (2013.01); ***B82Y 10/00*** (2013.01); ***B82Y 15/00*** (2013.01); ***B82Y 20/00*** (2013.01); ***H01L 21/02557*** (2013.01); ***H01L 21/02601*** (2013.01); ***H01L 29/0665*** (2013.01); ***H01L 29/0669*** (2013.01); ***H01L 29/0673*** (2013.01); ***H01L 29/125*** (2013.01); ***H01L 29/127*** (2013.01); ***H01L 29/22*** (2013.01); ***H01L 29/227*** (2013.01); ***H01L 33/285*** (2013.01); *H01L 51/502* (2013.01)

(58) **Field of Classification Search**

CPC H01L 29/125; H01L 29/152; H01L 20/66439; H01L 31/035218; H01L 31/025227

USPC 257/13, E51.04, E53.24; 438/341, 399

See application file for complete search history.

(56) **References Cited**

U.S. PATENT DOCUMENTS

2004/0026684 A1 2/2004 Empedocles
2004/0127130 A1 7/2004 Yi et al.

(Continued)

FOREIGN PATENT DOCUMENTS

CN 101842460 A 9/2010
WO WO 2012/035535 A1 3/2012

OTHER PUBLICATIONS

Jiang, Daixun et al., "Synthesis and Luminescence Properties of ZnS:Mn/ZnS Core/Shell Nanorod Structures," J. Material of Science, vol. 44, No. 11, 2009, pp. 2792-2795.

(Continued)

Primary Examiner — Tan N Tran
(74) *Attorney, Agent, or Firm* — Brinks Gilson & Lione

(57) **ABSTRACT**

A quantum rod includes a core of ZnS semiconductor particle having a rod shape; and a transition metal with which the core is doped and which is biased at one side of a length direction of the core.
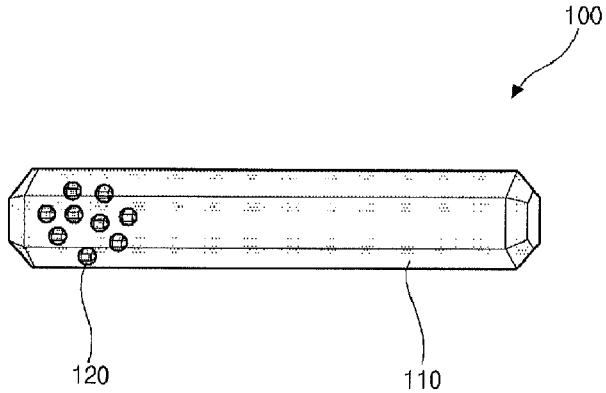
6 Claims, 6 Drawing Sheets