US009638294B2

(12) **United States Patent**
Buchen et al.

(10) **Patent No.: US 9,638,294 B2**
(45) **Date of Patent: May 2, 2017**

(54) **BELT TENSIONING DEVICE**

(71) Applicant: **Muhr und Bender KG**, Attendorn (DE)

(72) Inventors: **Thomas Buchen**, Drolshagen (DE); **Jan Diblik**, Mokrovraty (CZ); **Frederik Vollmer**, Schmallenberg-Dorlar (DE)

(73) Assignee: **Muhr und Bender KG**, Attendorn (DE)

(*) Notice: Subject to any disclaimer, the term of this patent is extended or adjusted under 35 U.S.C. 154(b) by 14 days.

(21) Appl. No.: **14/677,038**

(22) Filed: **Apr. 2, 2015**

(65) **Prior Publication Data**

US 2015/0285344 A1 Oct. 8, 2015

(30) **Foreign Application Priority Data**

Apr. 8, 2014 (DE) 10 2014 206 716

(51) **Int. Cl.**
F16H 7/12 (2006.01)
F16H 7/08 (2006.01)

(52) **U.S. Cl.**
CPC ***F16H 7/1281*** (2013.01); ***F16H 7/12*** (2013.01); ***F16H 7/1209*** (2013.01); *F16H 2007/081* (2013.01); *F16H 2007/0865* (2013.01); *F16H 2007/0893* (2013.01)

(58) **Field of Classification Search**
CPC F16H 2007/081; F16H 7/1218; F16H 2007/084; F16H 2007/0893; F16H 7/18
USPC 474/135, 133
See application file for complete search history.

(56) **References Cited**

U.S. PATENT DOCUMENTS

4,557,709 A * 12/1985 St. John F16H 7/1218 474/117
4,832,664 A * 5/1989 Groger F01L 1/02 123/90.15
5,575,727 A * 11/1996 Gardner F16H 7/1281 474/135
5,653,652 A * 8/1997 Simpson F16H 7/08 474/110
5,803,850 A * 9/1998 Hong F16H 7/1218 474/101
6,412,464 B1 * 7/2002 Schneider F01L 1/02 123/90.15

(Continued)

FOREIGN PATENT DOCUMENTS

DE 10333876 A1 2/2005
DE 102007051747 A1 5/2008

(Continued)

Primary Examiner — Henry Liu
(74) *Attorney, Agent, or Firm* — Bejin Bieneman PLC

(57) **ABSTRACT**

A belt tensioning device for a belt drive comprises a base member that is firmly connectable to a stationary component; at least one tensioning arm, which is pivotably supported relative to the base member around a pivot axis; a spring element, with which the tensioning arm is supported elastically in circumferential direction, wherein the ratio of the nominal diameter to the axial length of the spring element is larger than 3.0 in the mounted condition; and a tensioning roller for tensioning the belt, which is rotatably supported on the tensioning arm around an axis of rotation; wherein the base member and the tensioning arm are each at least partially made from plastic material.
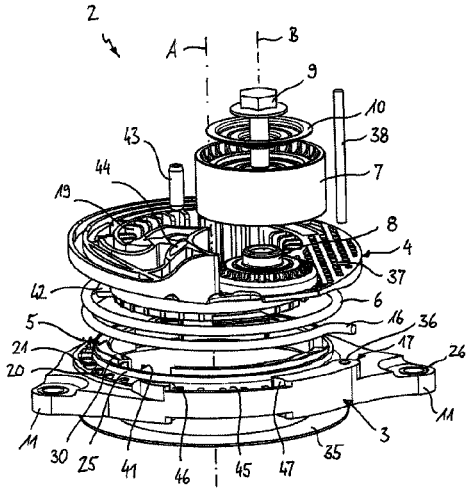
19 Claims, 4 Drawing Sheets