US009636994B2

(12) **United States Patent**
Hinrich

(10) **Patent No.: US 9,636,994 B2**
(45) **Date of Patent: May 2, 2017**

(54) **COOLING DEVICE FOR A HYBRID MODULE OF A HYBRID VEHICLE**

(71) Applicant: **Dr. Ing. h.c. F. Porsche Aktiengesellschaft**, Stuttgart (DE)

(72) Inventor: **Holger Hinrich**, Leonberg (DE)

(73) Assignee: **Dr. Ing. h.c.F. Porsche Aktiengesellschaft** (DE)

(*) Notice: Subject to any disclaimer, the term of this patent is extended or adjusted under 35 U.S.C. 154(b) by 241 days.

(21) Appl. No.: **14/608,411**

(22) Filed: **Jan. 29, 2015**

(65) **Prior Publication Data**

US 2015/0210155 A1 Jul. 30, 2015

(30) **Foreign Application Priority Data**

Jan. 29, 2014 (DE) 10 2014 101 035

(51) **Int. Cl.**

B60K 11/00	(2006.01)
B60K 1/00	(2006.01)
F16H 61/28	(2006.01)
F16H 57/04	(2010.01)
H02K 17/32	(2006.01)

(Continued)

(52) **U.S. Cl.**

CPC ***B60K 11/00*** (2013.01); ***B60K 1/00*** (2013.01); ***F16H 57/04*** (2013.01); ***F16H 57/0415*** (2013.01); ***F16H 57/0419*** (2013.01); ***F16H 61/2807*** (2013.01); ***H02K 9/22*** (2013.01); ***H02K 17/32*** (2013.01); *F01P 2050/24* (2013.01);

(Continued)

(58) **Field of Classification Search**

CPC B60K 11/00; B60K 11/06; B60K 6/22; B60K 6/405; B60K 23/02; F16H 57/04; F16H 57/045; F16H 57/0415; F16H 57/0419; F16H 61/2807; H02K 17/32; H05K 7/20; F01P 2050/24

USPC 165/185; 361/704

See application file for complete search history.

(56) **References Cited**

U.S. PATENT DOCUMENTS

5,361,650 A * 11/1994 Klecker F16H 61/0006 174/521
5,709,134 A * 1/1998 Ulm B60R 16/0239 174/521

(Continued)

FOREIGN PATENT DOCUMENTS

EP	2594445 A2	5/2013
JP	2000507338 A	6/2000
JP	2013126864 A	6/2013

Primary Examiner — Tho V Duong
(74) *Attorney, Agent, or Firm* — Gerald E. Hespos; Michael J. Porco; Matthew T. Hespos

(57) **ABSTRACT**

A cooling device (**2**) is provided for a hybrid module (**1**) of a hybrid vehicle. The hybrid module (**1**) has an actuator arranged between an internal combustion engine and an electric drive unit of the hybrid vehicle for actuating a separating clutch for separating the internal combustion engine and the electric drive unit. The hybrid module (**1**) also has control electronics (**7**). The actuator and the control electronics (**7**) are arranged within a heat protection hood (**9**) and at least the control electronics (**7**) are connected to the heat protection hood (**9**). The heat protection hood (**9**) is composed of heat-conducting material and is connected to a housing part (**5**) of the hybrid module (**1**). The cooling device enables use of the hybrid module in the region of hot components, such as the internal combustion engine or an exhaust system.
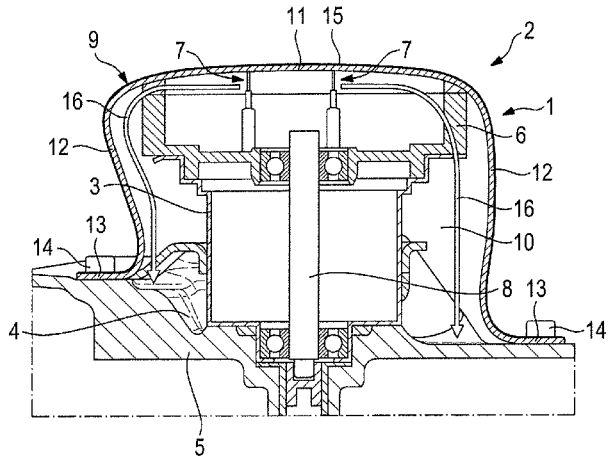
14 Claims, 1 Drawing Sheet