United States Patent [19]

Lebowitz

[11] **3,735,794**

[45] **May 29, 1973**

[54] **SPACE DIVIDER SYSTEM**

[75] Inventor: **Samuel Lebowitz,** Brooklyn, N.Y.

[73] Assignee: **Tieco Products, Inc.,** Royal Oak, Mich.

[22] Filed: **July 2, 1971**

[21] Appl. No.: **159,143**

[52] **U.S. Cl.** .....**160/135,** 160/351, 135/158 Q

[51] **Int. Cl.** **A47g 5/00**

[58] **Field of Search**.....160/135, 351; 135/15 PQ; 52/64, 122, 127, 239, 584; 287/20.924, 20.92 C, 14, 96, 99, 101; 248/159; 211/47, 86, 163, 169; 40/68, 125 R, 125 H, 145

[56] **References Cited**

UNITED STATES PATENTS

3,204,689	9/1965	Howell	160/135
3,559,352	2/1971	Magnuson	52/239
3,406,698	10/1968	Hutchison	135/1 C
3,635,233	1/1972	Robertson	135/15 PO
2,855,037	10/1958	Stiffel	211/86
3,605,851	9/1971	Miles et al.	160/135

Primary Examiner—Peter M. Caun
Attorney—James M. Heilman and Heilman & Heilman

[57] **ABSTRACT**

A corner post assembly for connecting panels or dividers to form a space divider system. The panels terminate in a bracket which is attached to the post and is slidably rotatable therewith permitting the panels to form any desired angle with adjacent panels.
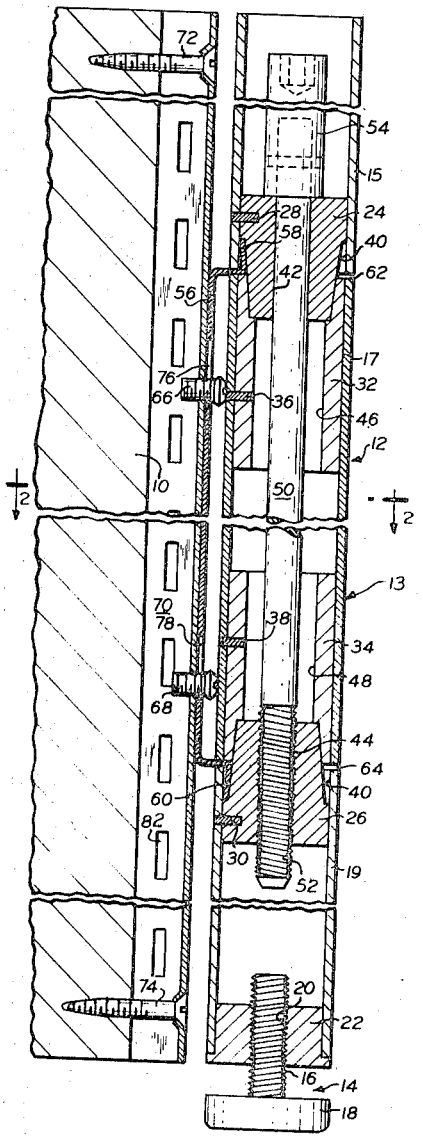
5 Claims, 4 Drawing Figures