March 8, 1960 L. L. JOHNSON 2,927,394

CONTAINER FOR HOUSING AND TRANSPORTING MINNOWS

Filed Aug. 26, 1958

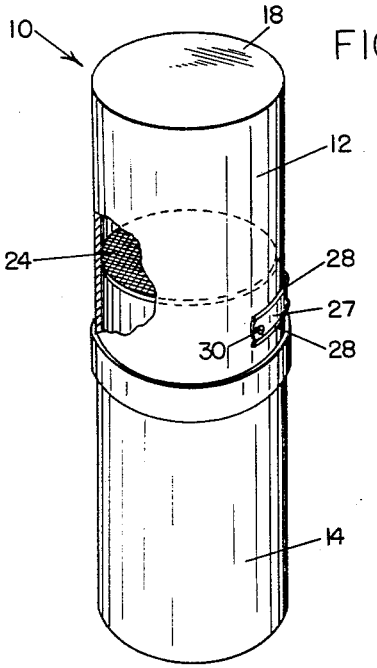

FIG. 1.

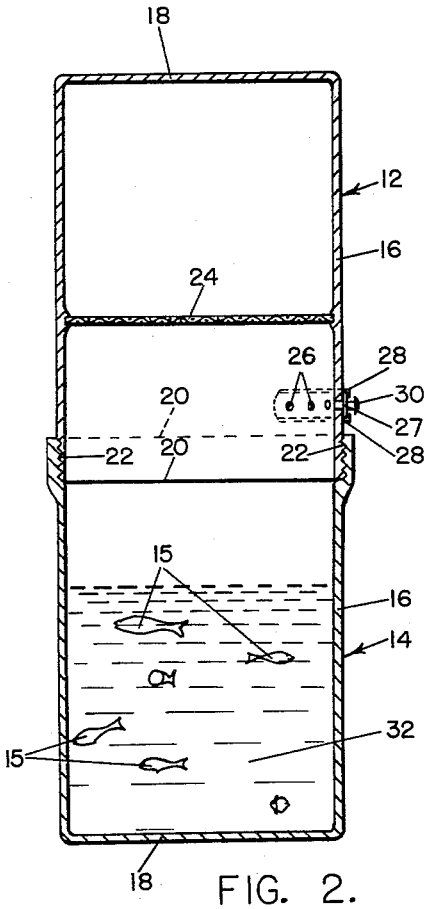

FIG. 2.

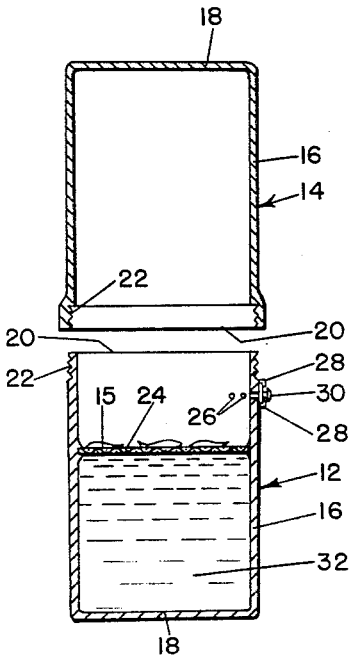

FIG. 3.

INVENTOR,
LLOYD L. JOHNSON.

BY Robert M. Dunning
ATTORNEY