July 25, 1950 F. J. WALLACE 2,516,494

ENDOSCOPE

Filed Jan. 31, 1946 2 Sheets-Sheet 1

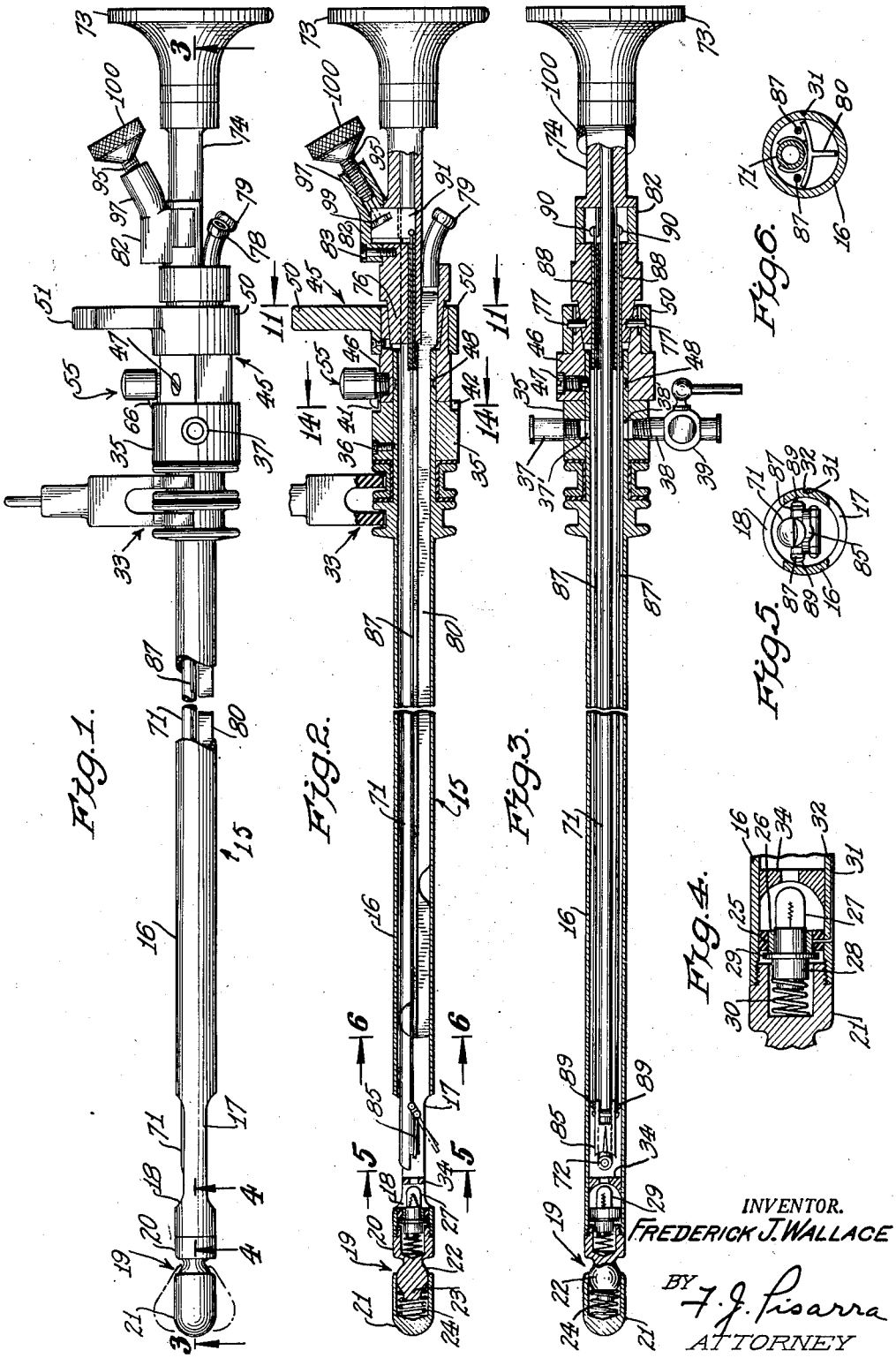

INVENTOR.
FREDERICK J. WALLACE
BY F. J. Pisarra
ATTORNEY