July 5, 1955 B. KOSCHATZKY ET AL 2,712,394

BOX FOR HOLDING CONTENTS UNDER INTERNAL PRESSURE

Filed June 3, 1949

FIG. 1

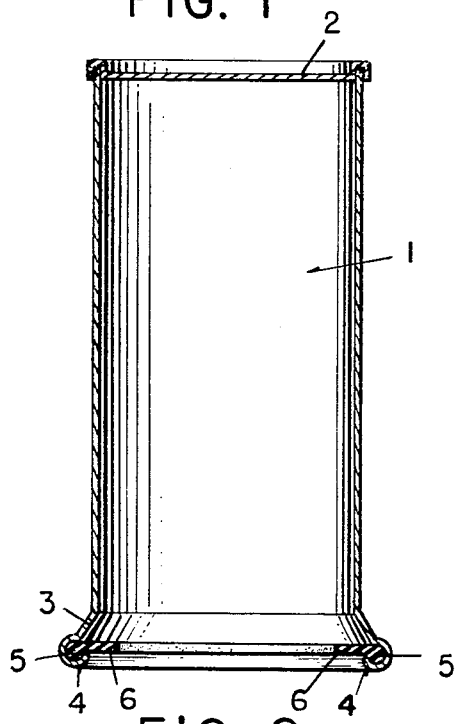

FIG. 3

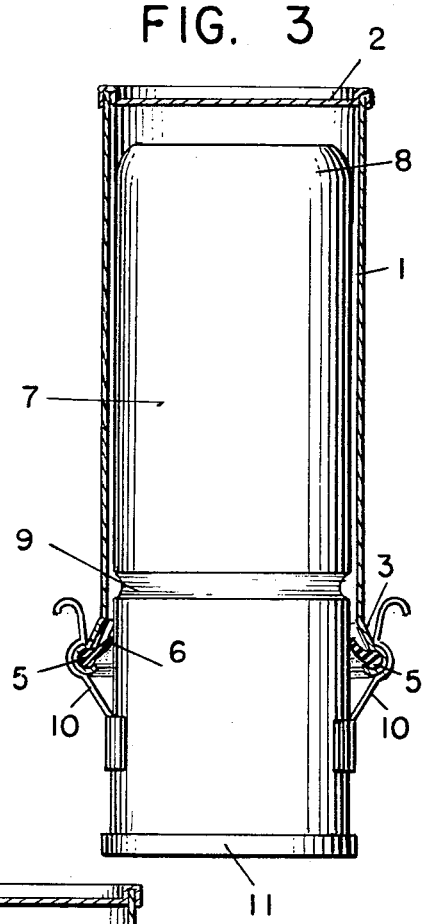

FIG. 2

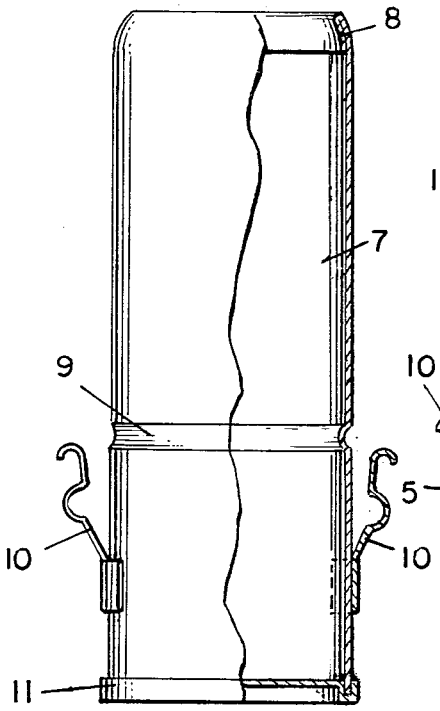

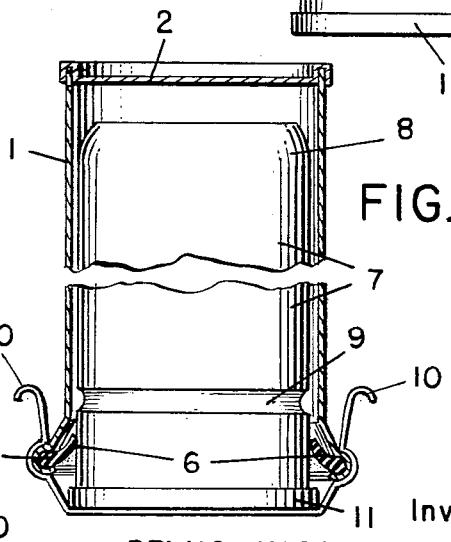

FIG. 4

Inventors:
BRUNO KOSCHATZKY,
GIUSEPPE PARINI,
By Stone, Boyden & Tuck
Attorneys.