United States Patent [19]

Grayhack et al.

[11] **Patent Number: 4,611,594**

[45] **Date of Patent: Sep. 16, 1986**

[54] **MEDICAL INSTRUMENT FOR CONTAINMENT AND REMOVAL OF CALCULI**

[75] Inventors: **John T. Grayhack**, La Grange; **Theodore V. Benderev**, Chicago, both of Ill.

[73] Assignee: **Northwestern University**, Evanston, Ill.

[21] Appl. No.: **599,020**

[22] Filed: **Apr. 11, 1984**

[51] **Int. Cl.**[4] **A61B 17/00**

[52] **U.S. Cl.** **128/328**; 128/345

[58] **Field of Search** 128/328, 320, 356, 345; 604/107

[56] **References Cited**

U.S. PATENT DOCUMENTS

2,918,919	12/1959	Wallace	128/328
2,943,626	7/1960	Dormia	128/328
3,074,408	1/1963	Chester	128/328
3,334,630	8/1967	Kramer	128/328
3,827,437	8/1974	Inaba	128/328
4,046,150	9/1977	Schwartz	128/328
4,243,040	1/1981	Beecher	128/328
4,469,100	9/1984	Hardwick	128/328

FOREIGN PATENT DOCUMENTS

1566147	7/1970	Fed. Rep. of Germany	128/328
2057636	3/1972	Fed. Rep. of Germany	128/328
2127125	5/1973	Fed. Rep. of Germany	128/328
1272412	8/1961	France	128/328

Primary Examiner—Michael H. Thaler

Attorney, Agent, or Firm—Tilton, Fallon, Lungmus

[57] **ABSTRACT**

Several versions of instruments are disclosed which are useful for the containment of calculi to minimize injury to surrounding tissue during removal and/or destruction of such calculi. In each embodiment a suitable grasping device is utilized to locate and grasp a stone (calculus) in a body passage or organ, such grasping device being used in combination with a catheter having an expandable and contractable distal end portion capable of receiving and substantially enclosing the stone to protect the surrounding tissue from injury that might otherwise be produced by the rough edges of the stone as it is extracted, or to shield such tissue as the stone is fragmented in situ and then contain the fragments as they are removed.
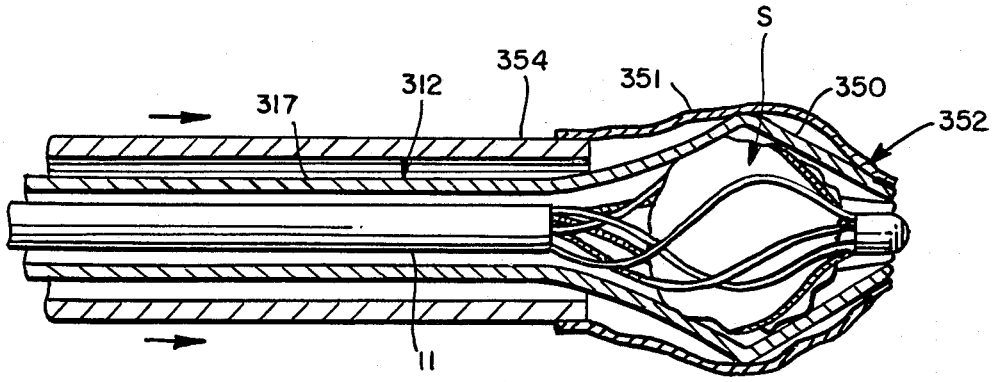
8 Claims, 21 Drawing Figures