US009411094B2

(12) United States Patent
Yu

(10) Patent No.: US 9,411,094 B2
(45) Date of Patent: Aug. 9, 2016

(54) **BACKLIGHT MODULE AND LIQUID CRYSTAL DISPLAY DEVICE**

(71) Applicant: **SHENZHEN CHINA STAR OPTOELECTRONICS TECHNOLOGY CO., LTD.**, Guangdong (CN)

(72) Inventor: **Gang Yu**, Guangdong (CN)

(73) Assignee: **SHENZHEN CHINA STAR OPTOELECTRONICS TECHNOLOGY CO.**, Guangdong (CN)

(*) Notice: Subject to any disclaimer, the term of this patent is extended or adjusted under 35 U.S.C. 154(b) by 13 days.

(21) Appl. No.: **14/411,353**

(22) PCT Filed: **Nov. 12, 2014**

(86) PCT No.: **PCT/CN2014/090857**

§ 371 (c)(1),
(2) Date: **Dec. 24, 2014**

(87) PCT Pub. No.: **WO2016/070443**

PCT Pub. Date: **May 12, 2016**

(65) **Prior Publication Data**

US 2016/0131824 A1 May 12, 2016

(30) **Foreign Application Priority Data**

Nov. 7, 2014 (CN) 2014 1 0625716

(51) **Int. Cl.**
G02B 6/42 (2006.01)
F21V 8/00 (2006.01)

(52) **U.S. Cl.**
CPC ***G02B 6/0081*** (2013.01); ***G02B 6/0091*** (2013.01)

(58) **Field of Classification Search**
CPC .. G02B 6/0073; G02B 6/0081; G02B 6/0091; G02B 6/0093
See application file for complete search history.

(56) **References Cited**

U.S. PATENT DOCUMENTS

2005/0253980 A1* 11/2005 Saito G02B 6/0038 349/64
2012/0287371 A1* 11/2012 Oura G02F 1/133615 349/60
2013/0258236 A1* 10/2013 Zhang G02B 6/0088 349/60
2013/0265503 A1* 10/2013 Hosoki G02B 6/0068 348/790
2013/0300972 A1* 11/2013 Wu G02B 6/0095 349/58
2014/0313773 A1* 10/2014 Wu G02B 6/0081 362/612

* cited by examiner

Primary Examiner — Julie Bannan
(74) *Attorney, Agent, or Firm* — WPAT, P.C., Intellectual Property Attorneys; Anthony King

(57) **ABSTRACT**

A backlight module is disclosed. The backlight module includes a light guide plate, a light source, a back plate, and a positioning component for maintaining a light coupling distance between the light emitting surface of the light source and the light incident surface of the light guide plate. There is a light coupling distance between the light emitting surface of the light source and the light incident surface of the light guide plate. When a temperature change occurs, the positioning component occurs as a first deformation, as well as the light guide plate occurs as a second deformation. The light coupling distance remains unchanged under the influence of the first deformation and the second deformation. The positioning reliability of the light guide plate is improved in the present invention.
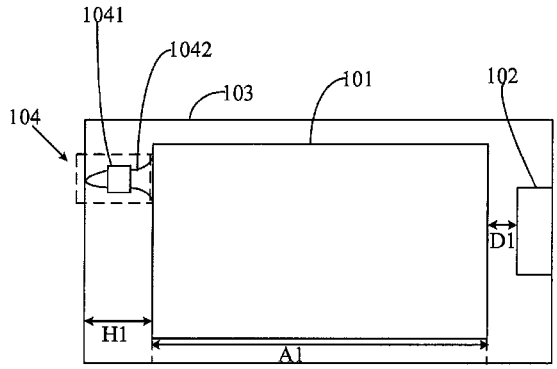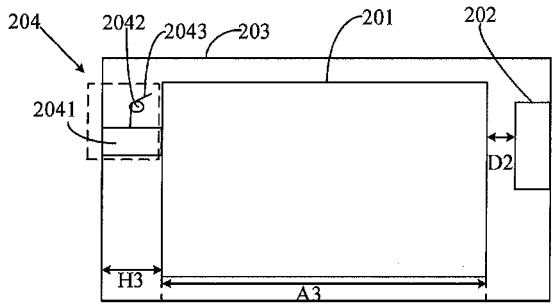
10 Claims, 3 Drawing Sheets