350-417 SR 591 SEARCH ROOM
XR 3,210,894

SUBSTITUTE FOR MISSING XR

Oct. 12, 1965 G. P. BENTLEY ETAL 3,210,894

METHOD OF PRODUCING ASPHERIC SURFACES ON MIRRORS OR LENSES

Filed Aug. 13, 1962

FIG.1.

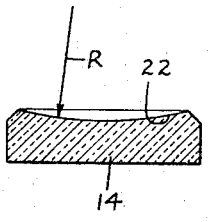

FIG.2.

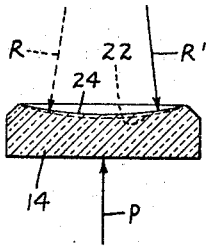

FIG.3.

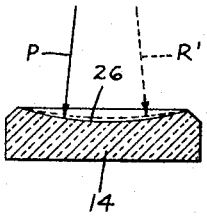

FIG.4.

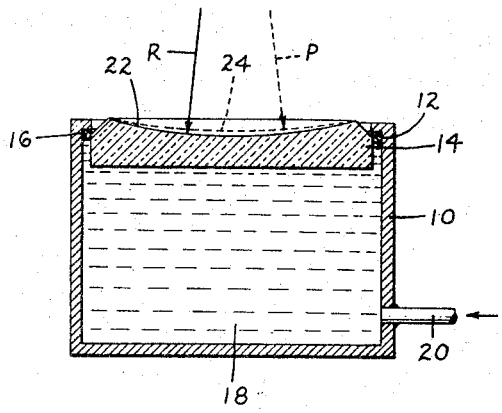

FIG.5.

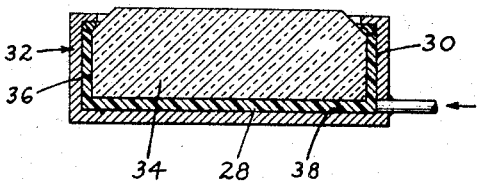

FIG.6.

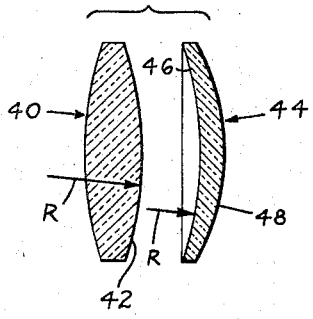

FIG.7.

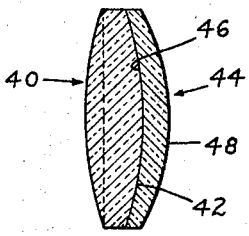

INVENTORS:
GEORGE P. BENTLEY
GERALD H. LOVINS
BY
Brumbaugh, Free, Graves & Donohue
THEIR ATTORNEYS

3210894
OR IN 51/284R