US009410294B2

(12) **United States Patent**
Harkness

(10) **Patent No.: US 9,410,294 B2**
(45) **Date of Patent: Aug. 9, 2016**

(54) **RAILWAY RAIL SUPPORT PLATE**

(75) Inventor: **Steven Harkness**, Wingfield (AU)

(73) Assignee: **INTERCAST & FORGE PTY LIMITED**, Wingfield, SA (AU)

(*) Notice: Subject to any disclaimer, the term of this patent is extended or adjusted under 35 U.S.C. 154(b) by 161 days.

(21) Appl. No.: **14/119,907**

(22) PCT Filed: **May 25, 2012**

(86) PCT No.: **PCT/AU2012/000587**

§ 371 (c)(1),
(2), (4) Date: **Mar. 28, 2014**

(87) PCT Pub. No.: **WO2012/159167**

PCT Pub. Date: **Nov. 29, 2012**

(65) **Prior Publication Data**

US 2014/0124588 A1 May 8, 2014

(30) **Foreign Application Priority Data**

May 25, 2011 (AU) 2011902033

(51) **Int. Cl.**
E01B 9/40 (2006.01)
E01B 9/42 (2006.01)

(52) **U.S. Cl.**
CPC ***E01B 9/40*** (2013.01); ***E01B 9/42*** (2013.01)

(58) **Field of Classification Search**
CPC E01B 9/00; E01B 9/02; E01B 9/38; E01B 9/40; E01B 9/42; E01B 9/54
USPC 238/287, 290, 292, 293, 304, 306
See application file for complete search history.

(56) **References Cited**

U.S. PATENT DOCUMENTS

2,146,341	A	2/1939	Kahn	
2,656,116	A *	10/1953	Protzeller	E01B 9/40 238/283
6,296,195	B1 *	10/2001	Blank	E01B 9/681 238/2
6,761,322	B1	7/2004	Porrill et al.	
2011/0068182	A1	3/2011	Bosterling et al.	

FOREIGN PATENT DOCUMENTS

GB	720854	12/1954
GB	1323624	7/1973
WO	9845537 A1	10/1998
WO	2005083178 A1	9/2005

* cited by examiner

Primary Examiner — R. J. McCarry, Jr.
(74) *Attorney, Agent, or Firm* — Klauber & Jackson LLC

(57) **ABSTRACT**

This invention relates to a support plate for supporting a railway rail on a rail support member, said support plate comprising a lower surface for directly or indirectly contacting a mounting surface of the rail support member, an upper surface for directly or indirectly supporting the rail, and an intermediate region interposing the upper and lower surfaces, for reducing support plate weight.
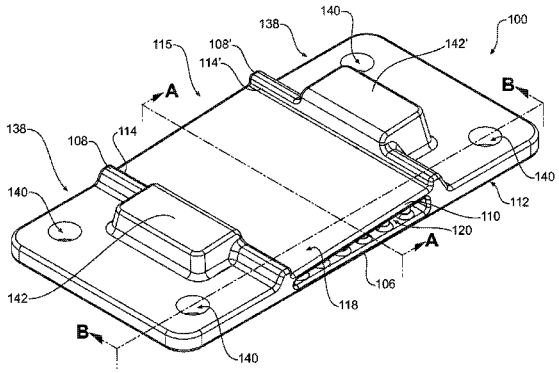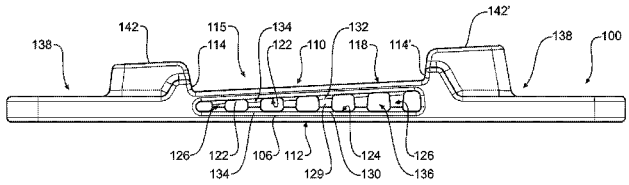
21 Claims, 14 Drawing Sheets