350-423 SR CROSS REFERENCE SEARCH ROOM
XR 3,305,294
TX406SE

Feb. 21, 1967 L. W. ALVAREZ 3,305,294

TWO-ELEMENT VARIABLE-POWER SPHERICAL LENS

Filed Dec. 3, 1964 2 Sheets-Sheet 1

FIG-1

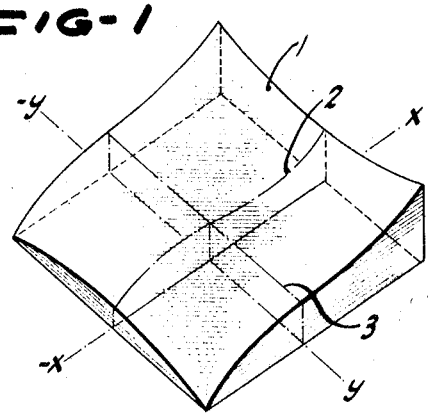

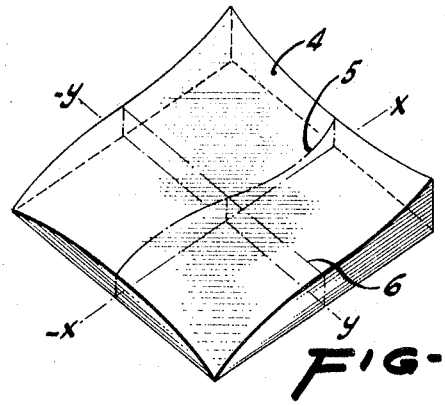

FIG-2

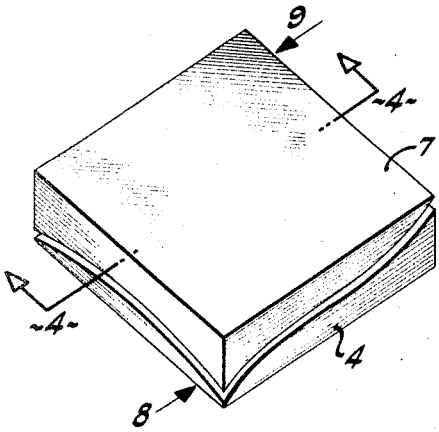

FIG-3

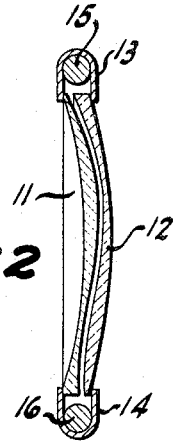

FIG-12

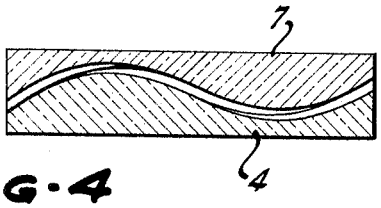

FIG-4

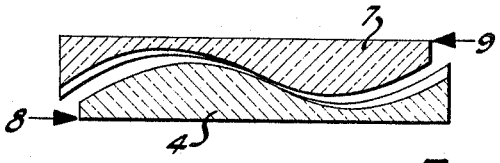

FIG-5

INVENTOR.
LUIS W. ALVAREZ

BY

Lippincott, Ralls & Hendrickson
ATTORNEYS