WALL-MOUNTED PARTITIONS

Filed Aug. 8, 1968 2 Sheets-Sheet 1

Fig.1

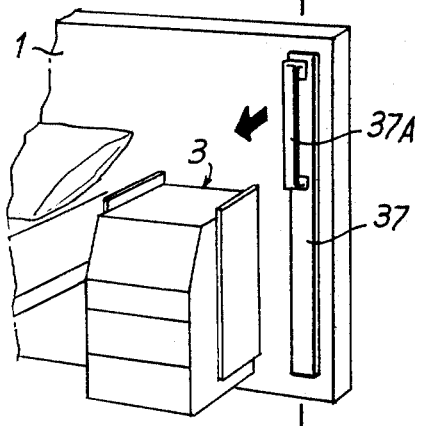

Fig.2

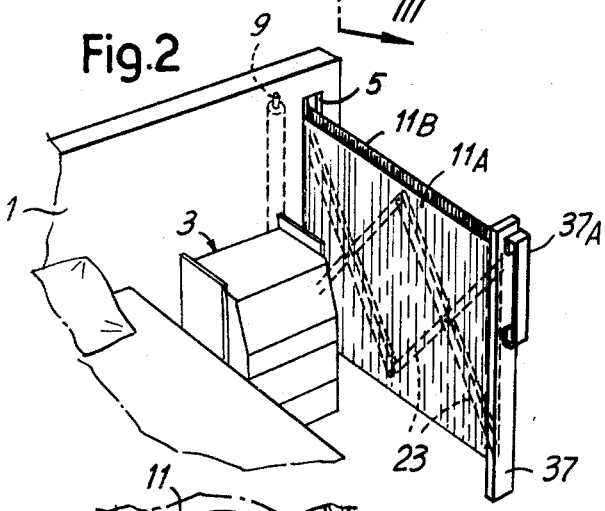

Fig.3

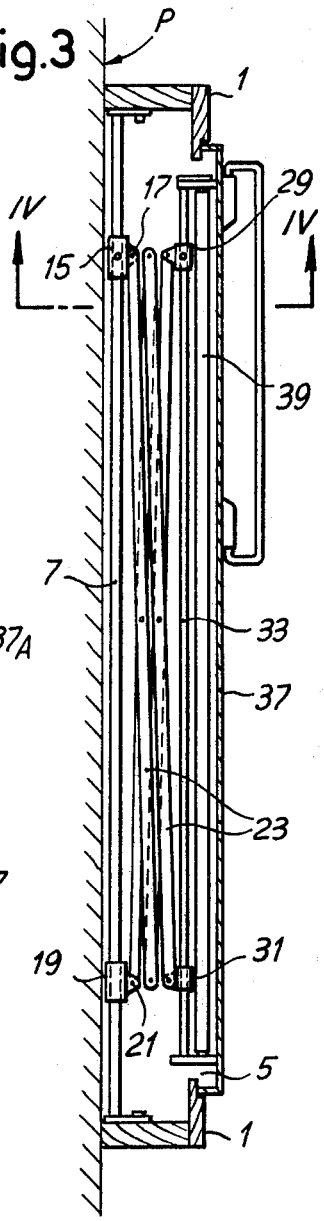

Fig.4

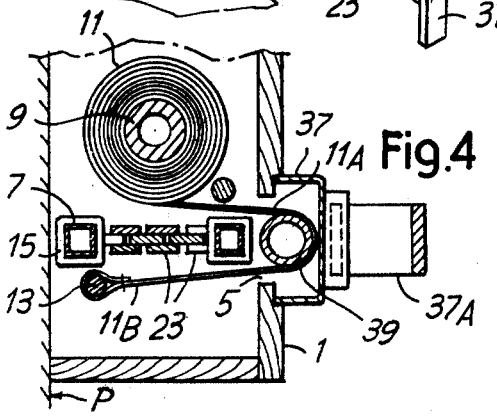

INVENTOR:
GIANCARLO POFFERI
By Polachek & Saulsbury
ATTORNEYS.