US008985693B2

(12) **United States Patent**
Purpura et al.

(10) **Patent No.: US 8,985,693 B2**
(45) **Date of Patent: Mar. 24, 2015**

(54) **TRANSPORT VEHICLE UPRIGHT SLEEP SUPPORT SYSTEM**

(71) Applicant: **The Boeing Company**, Chicago, IL (US)

(72) Inventors: **William J. Purpura**, Anaheim, CA (US); **Paula K. Purpura**, Anaheim, CA (US)

(73) Assignee: **The Boeing Company**, Chicago, IL (US)

(*) Notice: Subject to any disclaimer, the term of this patent is extended or adjusted under 35 U.S.C. 154(b) by 0 days.

(21) Appl. No.: **13/973,118**

(22) Filed: **Aug. 22, 2013**

(65) **Prior Publication Data**

US 2013/0341367 A1 Dec. 26, 2013

Related U.S. Application Data

(63) Continuation-in-part of application No. 13/287,886, filed on Nov. 2, 2011, now Pat. No. 8,528,978.

(51) **Int. Cl.**

A47C 7/38	(2006.01)
A45F 4/02	(2006.01)
A45C 7/00	(2006.01)
A45F 3/04	(2006.01)
A45F 4/06	(2006.01)
B64D 11/06	(2006.01)

(52) **U.S. Cl.**

CPC . ***A45F 4/06*** (2013.01); ***B64D 11/06*** (2013.01); *B64D 2011/0668* (2013.01); *B64D 2011/0675* (2013.01)

USPC **297/394**; 297/392; 297/393; 297/397; 297/487; 297/488; 248/118; 224/153; 224/270; 224/275; 224/576; 224/581; 224/585; 224/586; 224/630

(58) **Field of Classification Search**

USPC 297/394, 392, 397, 487, 488; 248/118; 224/153, 581, 270, 275, 576, 585, 586, 224/630

See application file for complete search history.

(56) **References Cited**

U.S. PATENT DOCUMENTS

245,639	A *	8/1881	Lay	297/394
1,260,929	A *	3/1918	Maccy	297/394
4,097,086	A *	6/1978	Hudson	297/397 X
4,249,712	A *	2/1981	DeLong	248/118
6,042,185	A *	3/2000	Cowgur	297/393
6,336,576	B1 *	1/2002	Easter	224/153
6,619,733	B2 *	9/2003	Pearson	297/488 X
6,659,319	B2 *	12/2003	Purpura	224/576
6,684,431	B2 *	2/2004	Splane, Jr.	248/118 X
6,796,473	B2 *	9/2004	Purpura	224/576
6,805,403	B2 *	10/2004	Buch	297/146
6,857,149	B2 *	2/2005	Hoggatt et al.	5/632
7,681,769	B2 *	3/2010	Kramer	224/581
7,748,064	B2 *	7/2010	Hamilton	297/394 X
7,909,406	B2 *	3/2011	Samuelsen	297/397

(Continued)

Primary Examiner — Rodney B White
(74) *Attorney, Agent, or Firm* — Felix L. Fischer

(57) **ABSTRACT**

An upright sleep support system incorporates a head cushion having a face relief aperture to receive the eyes, nose, mouth and chin of a passenger placing his or her face against the head cushion with a hinged support structure for angular adjustment, sleeves that open in front to support the passengers arms, and a chest cushion on the back of the device. The chest cushion receives the passenger's chest in a forward leaning position. The head cushion is deployable from a backpack and the chest cushion is integrated into the back of the backpack.
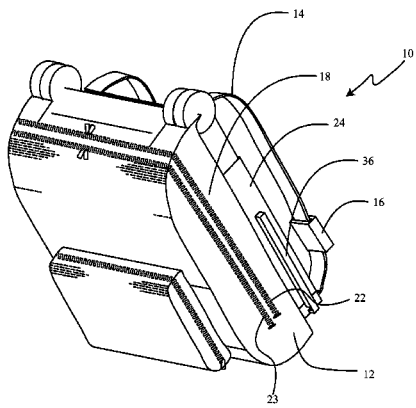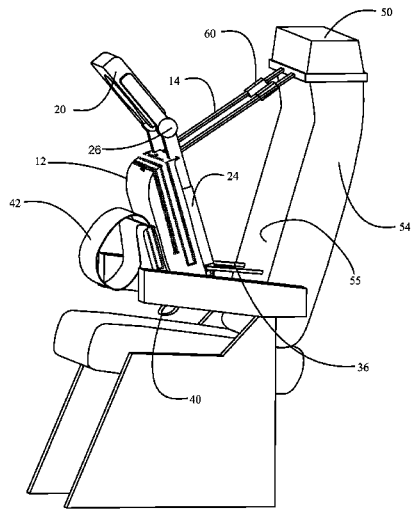
19 Claims, 12 Drawing Sheets