Dec. 26, 1939. W. C. REYNOLDS ET AL 2,185,093

RUBBER BASKET

Filed June 6, 1939

Fig. 1.

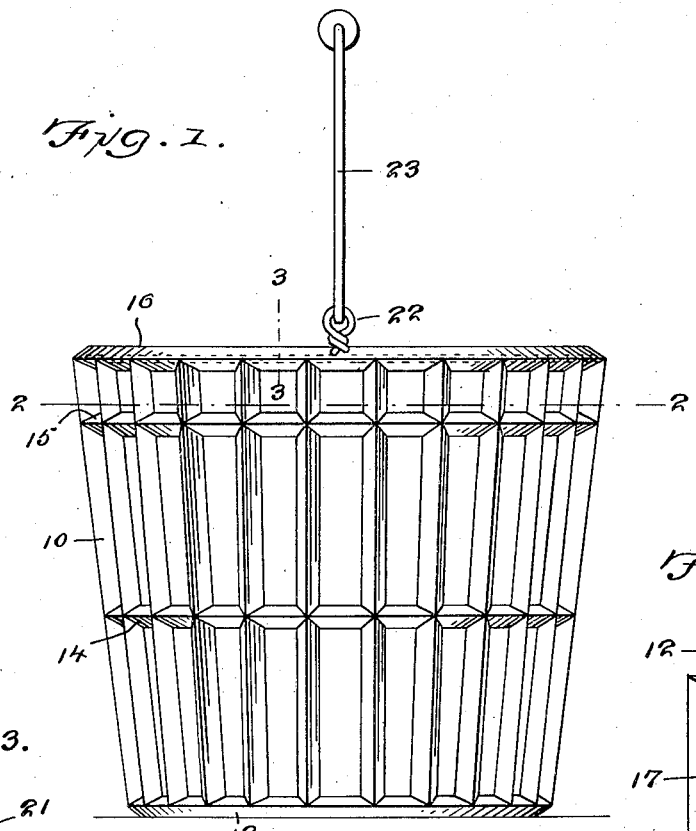

Fig. 4

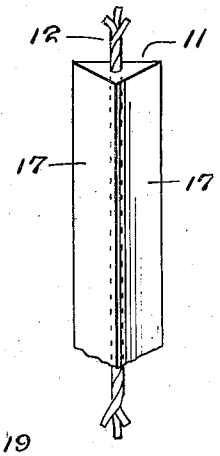

Fig. 3.

Fig. 2.

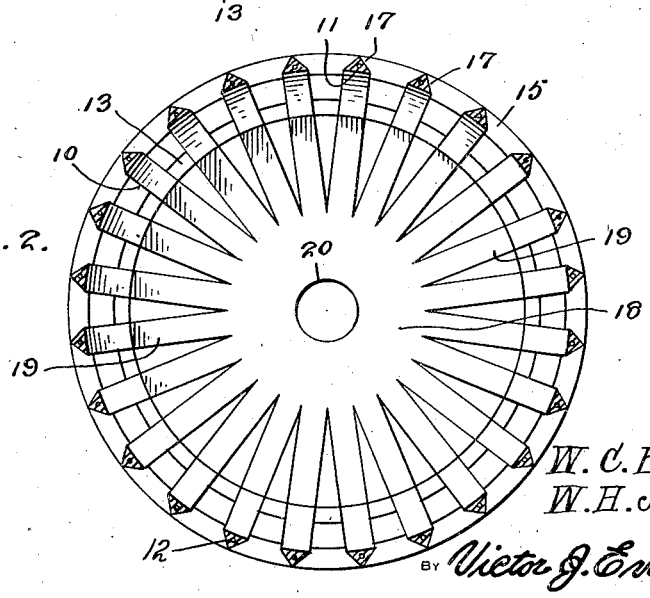

W. C. Reynolds
W. H. Jordan
INVENTOR

BY Victor J. Evans & Co.
ATTORNEYS