Feb. 19, 1924. 1,484,093

J. SOSS

HINGE

Filed Nov. 21, 1921

Fig. 1.

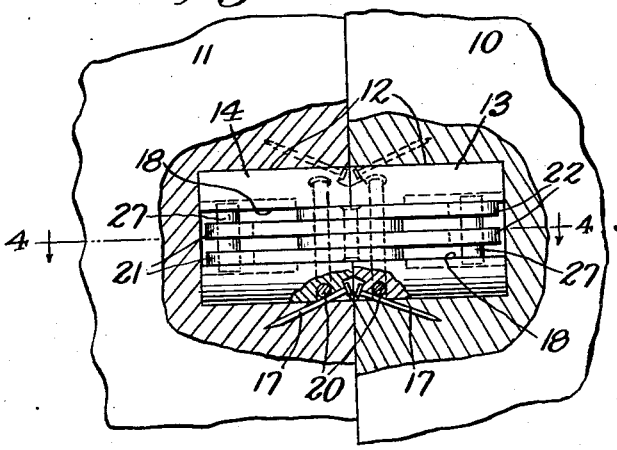

Fig. 2.

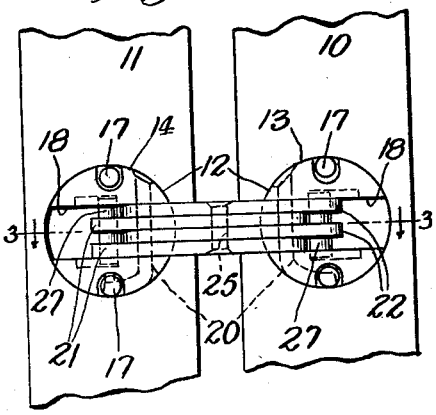

Fig. 3.

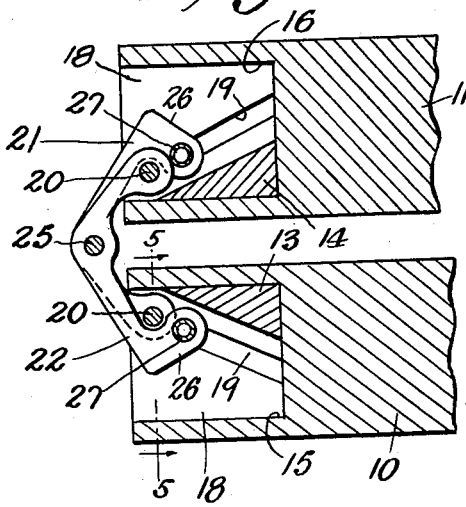

Fig. 4.

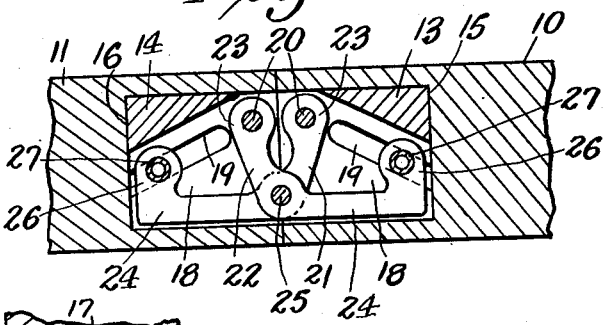

Fig. 5.

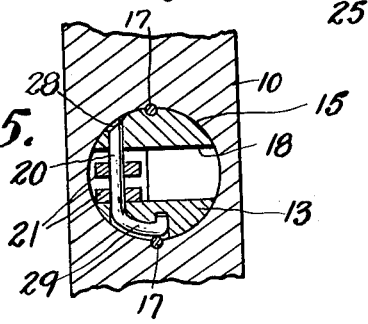

Inventor
Joseph Soss
By his Attorneys
Edgar Tate & Co