US008269393B2

(12) **United States Patent**
Patel et al.

(10) **Patent No.: US 8,269,393 B2**
(45) **Date of Patent: Sep. 18, 2012**

(54) **CROWNED END WINDING SUPPORT FOR MAIN WOUND FIELD OF A GENERATOR**

(75) Inventors: **Dhaval Patel**, Rockford, IL (US); **Alan D. Hanson**, Winnebago, IL (US); **Glenn W. Hufstedler**, Loves Park, IL (US)

(73) Assignee: **Hamilton Sundstrand Corporation**, Windsor Locks, CT (US)

(*) Notice: Subject to any disclaimer, the term of this patent is extended or adjusted under 35 U.S.C. 154(b) by 519 days.

(21) Appl. No.: **12/487,023**

(22) Filed: **Jun. 18, 2009**

(65) **Prior Publication Data**

US 2010/0320860 A1 Dec. 23, 2010

(51) **Int. Cl.**
H02K 1/00 (2006.01)

(52) **U.S. Cl.** **310/194**

(58) **Field of Classification Search** 310/270, 310/194, 214, 215

See application file for complete search history.

(56) **References Cited**

U.S. PATENT DOCUMENTS

3,977,621	A	8/1976	Huffman	
4,361,387	A	11/1982	Cloutier	
4,646,985	A	3/1987	Goyau et al.	
5,005,123	A	4/1991	Mierzwinski	
5,114,770	A	5/1992	Echizen et al.	
5,279,700	A	1/1994	Retti	
5,527,391	A	6/1996	Echizen et al.	
5,660,961	A	8/1997	Yu	
5,814,005	A	9/1998	Barra et al.	
5,843,088	A	12/1998	Barra et al.	
5,857,294	A	1/1999	Castro	
6,011,377	A	1/2000	Heglund et al.	
6,037,752	A	3/2000	Glennon	
6,064,121	A	5/2000	Shervington et al.	
6,091,168	A	7/2000	Halsey et al.	
6,124,649	A	9/2000	Schafroth	
6,155,726	A	12/2000	Ishikawa et al.	
6,181,112	B1	1/2001	Latos et al.	
6,183,933	B1	2/2001	Ishikawa et al.	
6,199,519	B1	3/2001	Van Blarigan	
6,241,004	B1	6/2001	Ebisu et al.	
6,281,678	B1	8/2001	Auville	
6,316,714	B1	11/2001	Kotanagi et al.	
6,329,465	B1	12/2001	Takahashi et al.	
6,359,412	B1	3/2002	Heglund	
6,359,841	B1	3/2002	Kotanagi et al.	
6,407,965	B1	6/2002	Matoge et al.	
6,442,210	B1	8/2002	Pennell	
6,462,429	B1	10/2002	Dhyanchand et al.	
6,465,928	B1	10/2002	Shervington et al.	
6,470,933	B1	10/2002	Volpi	
6,508,299	B2	1/2003	Ebisu et al.	
6,530,418	B2	3/2003	Ebisu et al.	
6,546,982	B1	4/2003	Brown et al.	
6,667,140	B2	12/2003	Tosaka et al.	
6,707,205	B2	3/2004	Johnsen	
6,727,609	B2	4/2004	Johnsen	
6,836,086	B1	12/2004	Goldberg et al.	
6,849,987	B2 *	2/2005	Tornquist et al.	310/270
6,861,626	B2	3/2005	Ogasawara et al.	
6,885,111	B2	4/2005	Volpi	

(Continued)

Primary Examiner — Nguyen N Hanh
(74) *Attorney, Agent, or Firm* — Carlson, Gaskey & Olds PC

(57) **ABSTRACT**

An end turn support for a generator includes a wire support. The wire support extends along an axis in a radial direction from an axis of rotation. The wire support defines an arcuate wire receipt surface.
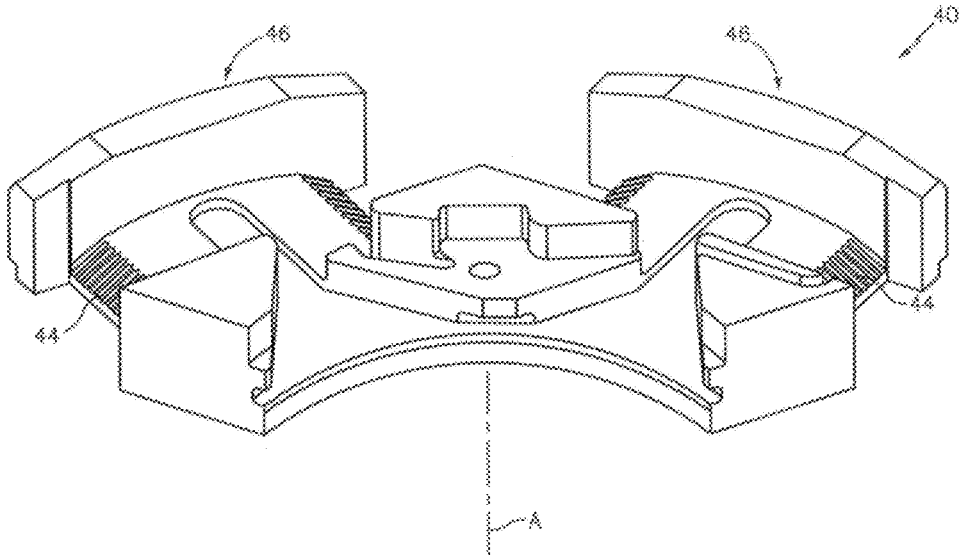
20 Claims, 7 Drawing Sheets