FIG. 1

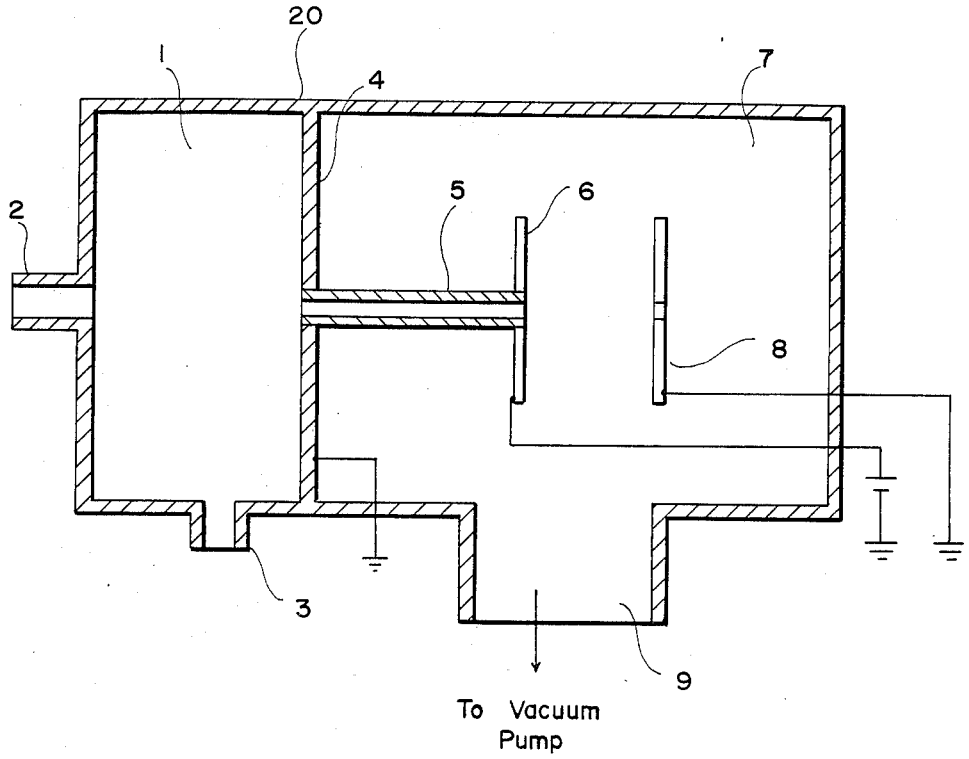
20
1
4
7
2
5
6
8
3
9
To Vacuum Pump

FIG. 2

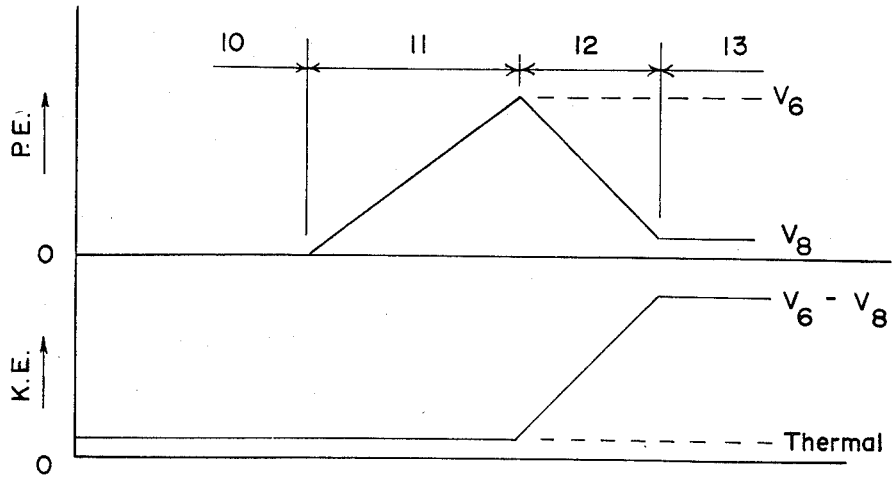
10
11
12
13
P.E.
0
V_6
V_8
K.E.
0
$V_6 - V_8$
Thermal