June 21, 1960 C. J. MAZZONI 2,941,293

HAIR CLIPPER

Filed Dec. 17, 1958

Fig. 1

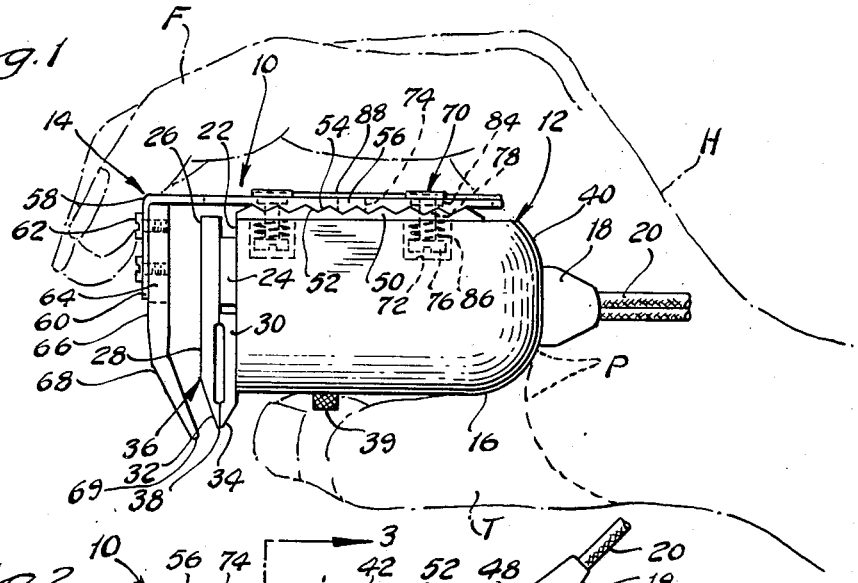

Fig. 2

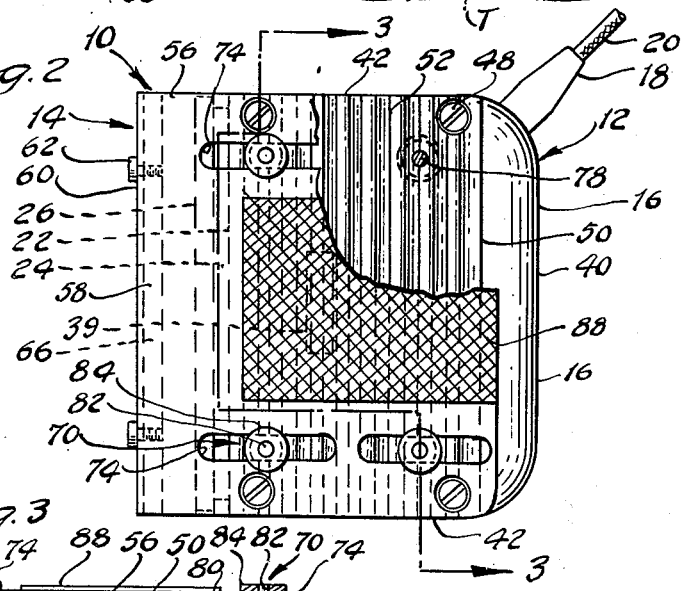

Fig. 3

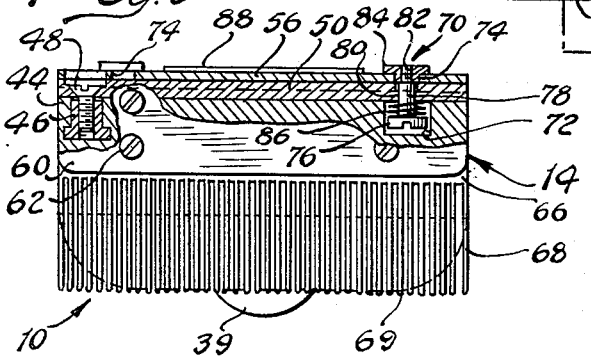

INVENTOR.
CHESTER J. MAZZONI
BY
Barthel & Bugbee
ATTY'S.