US009638293B2

(12) **United States Patent**
Mueller et al.

(10) **Patent No.: US 9,638,293 B2**
(45) **Date of Patent: May 2, 2017**

(54) **VARIABLE BELT TENSIONER FOR AN INTERNAL COMBUSTION ENGINE**

(71) Applicant: **GM GLOBAL TECHNOLOGY OPERATIONS LLC**, Detroit, MI (US)

(72) Inventors: **Torsten Mueller**, Ruesselsheim (DE); **Tobias Sandmann**, Aachen (DE); **Guenther Schlarb**, Kelsterbach (DE)

(73) Assignee: **GM GLOBAL TECHNOLOGY OPERATIONS LLC**, Detroit

(*) Notice: Subject to any disclaimer, the term of this patent is extended or adjusted under 35 U.S.C. 154(b) by 159 days.

(21) Appl. No.: **14/530,127**

(22) Filed: **Oct. 31, 2014**

(65) **Prior Publication Data**

US 2015/0119175 A1 Apr. 30, 2015

(30) **Foreign Application Priority Data**

Oct. 31, 2013 (GB) 1319251.3

(51) **Int. Cl.**
F16H 7/22 (2006.01)
F16H 7/08 (2006.01)
F16H 7/12 (2006.01)

(52) **U.S. Cl.**
CPC ... ***F16H 7/1281*** (2013.01); *F16H 2007/0823* (2013.01)

(58) **Field of Classification Search**
CPC F16H 7/1281; F16H 2007/0806; F16H 2007/0823; F16H 2007/0812; F02B 67/06
USPC 474/110
See application file for complete search history.

(56) **References Cited**

U.S. PATENT DOCUMENTS

2,726,364 A * 12/1955 Merritt H01H 35/006 318/475
4,298,342 A * 11/1981 Clayton F16H 7/129 474/110
4,478,595 A * 10/1984 Hayakawa F02B 77/081 474/109
4,573,952 A * 3/1986 Schulze F16H 7/1254 474/110
4,702,727 A * 10/1987 Dahm F16H 7/1218 474/101
4,878,885 A 11/1989 Brandenstein et al.
4,917,654 A 4/1990 Edwards
5,439,420 A * 8/1995 Meckstroth F02B 67/06 474/133
5,752,891 A 5/1998 Meckstroth et al.
(Continued)

FOREIGN PATENT DOCUMENTS

DE 2707247 A1 8/1978
DE 10118277 A1 10/2002
(Continued)

Primary Examiner — Henry Liu
(74) *Attorney, Agent, or Firm* — Lorenz & Kopf, LLP.

(57) **ABSTRACT**

The present disclosure describes a variable belt tensioner of an internal combustion engine for adjusting a belt tensioning. The tensioner includes in a series configuration an electric motor, a worm drive, a lever drive and a belt tensioner roller. The worm drive is driven by the electric motor and is mechanically connected to the lever drive for transmitting a rotation thereto. The lever drive is mechanically connected to the belt tensioner roller for transmitting a translation thereto, thus allowing the belt tensioner roller to adjust the belt tensioning.
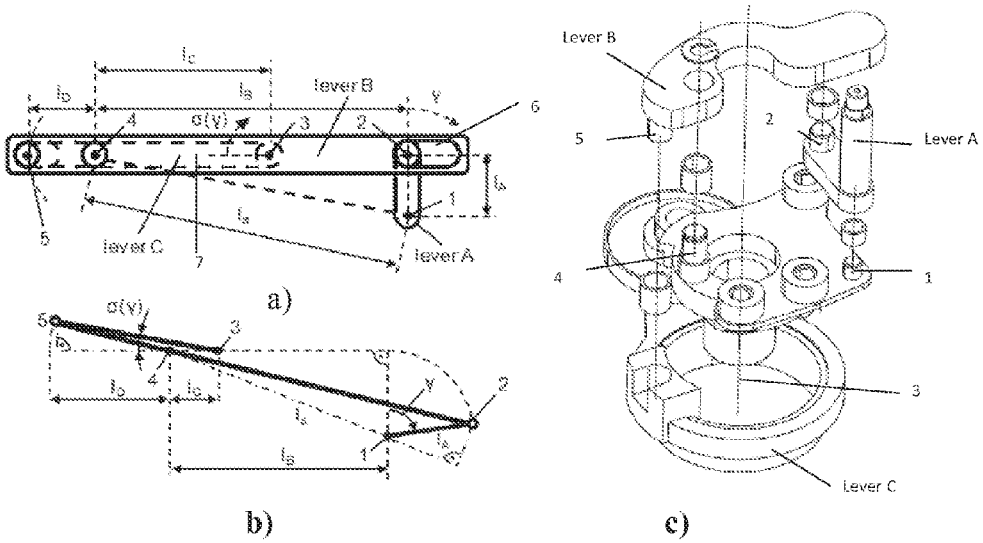
7 Claims, 4 Drawing Sheets