US009636493B2

(12) **United States Patent**
Chung

(10) **Patent No.: US 9,636,493 B2**
(45) **Date of Patent: May 2, 2017**

(54) **MULTI-LUMEN TUBING TO SINGLE LUMEN TUBING CONNECTOR**

(71) Applicant: **Fenwal, Inc.**, Lake Zurich, IL (US)

(72) Inventor: **Terry Chung**, Kileer, IL (US)

(73) Assignee: **Fenwal, Inc.**, Lake Zurich, IL (US)

(*) Notice: Subject to any disclaimer, the term of this patent is extended or adjusted under 35 U.S.C. 154(b) by 96 days.

(21) Appl. No.: **13/786,175**

(22) Filed: **Mar. 5, 2013**

(65) **Prior Publication Data**

US 2013/0304039 A1 Nov. 14, 2013

Related U.S. Application Data

(60) Provisional application No. 61/644,282, filed on May 8, 2012.

(51) **Int. Cl.**
A61M 39/10 (2006.01)
A61M 39/08 (2006.01)

(52) **U.S. Cl.**
CPC ***A61M 39/105*** (2013.01); *A61M 2039/082* (2013.01); *Y10T 29/49778* (2015.01)

(58) **Field of Classification Search**
CPC A61M 39/10; A61M 39/105; A61M 39/14; A61M 2039/1077; A61M 2039/082; A61M 39/20; F16L 37/56; F16L 31/00; F16L 39/02; F16L 39/00; B04B 5/0442; B04B 2005/045
USPC 604/533, 534, 535; 285/122.1, 124.1, 285/124.3, 125.1, 129.1
See application file for complete search history.

(56) **References Cited**

U.S. PATENT DOCUMENTS

4,508,367	A	4/1985	Oreopoulos et al.	
4,670,009	A *	6/1987	Bullock	604/533
5,551,942	A *	9/1996	Brown et al.	494/45
5,996,634	A *	12/1999	Dennehey	B04B 5/0442 138/109
8,257,239	B2	9/2012	Manzella et al.	
8,323,265	B2	12/2012	Heaton	
2005/0256461	A1*	11/2005	DiFiore	A61M 25/0075 604/247
2005/0267445	A1*	12/2005	Mendels	604/534

* cited by examiner

Primary Examiner — Nathan R Price
Assistant Examiner — Weng Lee
(74) *Attorney, Agent, or Firm* — Foley & Lardner LLP

(57) **ABSTRACT**

A connector for a fluid handling system includes a body defining a plurality of internal passages that connect single-lumen tubes to lumens of a multi-lumen tube. Openings located along an internal edge of connector provide fluid communication between the internal passages and openings located along a curved outer surface of the multi-lumen tube.
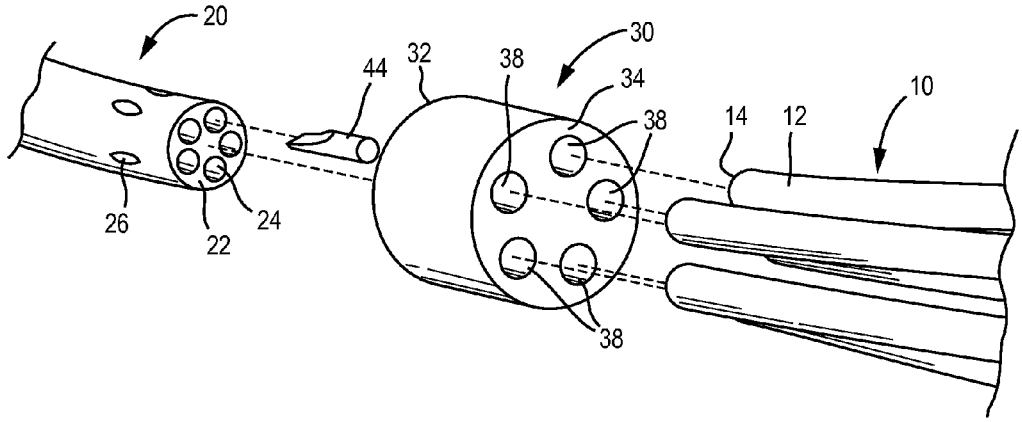
7 Claims, 2 Drawing Sheets