US009636193B2

(12) **United States Patent**
Kim

(10) **Patent No.: US 9,636,193 B2**
(45) **Date of Patent: May 2, 2017**

(54) **ARTICULATOR**

(76) Inventor: **Se Hun Kim**, Jeonju-si (KR)

(*) Notice: Subject to any disclaimer, the term of this patent is extended or adjusted under 35 U.S.C. 154(b) by 493 days.

(21) Appl. No.: **14/347,647**

(22) PCT Filed: **Jul. 24, 2012**

(86) PCT No.: **PCT/KR2012/005897**
§ 371 (c)(1),
(2), (4) Date: **Mar. 27, 2014**

(87) PCT Pub. No.: **WO2013/055021**
PCT Pub. Date: **Apr. 18, 2013**

(65) **Prior Publication Data**

US 2014/0220504 A1 Aug. 7, 2014

(30) **Foreign Application Priority Data**

Oct. 14, 2011 (KR) 10-2011-0104989

(51) **Int. Cl.**
A61C 11/02 (2006.01)
A61C 11/06 (2006.01)
A61C 11/08 (2006.01)

(52) **U.S. Cl.**
CPC ***A61C 11/02*** (2013.01); ***A61C 11/06*** (2013.01); ***A61C 11/08*** (2013.01); ***A61C 11/087*** (2013.01)

(58) **Field of Classification Search**
CPC A61C 11/02; A61C 11/08; A61C 11/06; A61C 11/087; A61C 11/22; A61C 11/25; A61C 11/27
USPC 433/55, 57
See application file for complete search history.

(56) **References Cited**

U.S. PATENT DOCUMENTS

3,905,112 A 9/1975 Swanson
3,908,271 A * 9/1975 Derda A61C 11/022 433/58
4,024,640 A * 5/1977 Guichet A61C 11/022 433/57
4,245,987 A * 1/1981 Bertoldi A61C 11/022 433/61
4,445,855 A * 5/1984 Hobo A61C 11/022 433/27
4,758,155 A * 7/1988 Marino A61C 11/022 433/54
5,431,564 A * 7/1995 Guichet A61C 11/022 433/55

(Continued)

FOREIGN PATENT DOCUMENTS

KR 10-0865591 10/2008
KR 10-0976043 8/2010

(Continued)

OTHER PUBLICATIONS

International Search Report Dated Feb. 13, 2013 From the Korean Intellectual Property Office Re. Application No. PCT/KR2012/005897 and Its Translation Into English.

Primary Examiner — Nicholas Lucchesi

(57) **ABSTRACT**

The present invention relates to an articulator. The articulator may significantly improve the coupling force between a maxillary fixing part and a mandibular fixing part. In addition, since the horizontal turning radius of the maxillary fixing part is easily adjustable according to the size of a mandible model, errors that may occur when the state of occlusion between the mandible model and a maxillary model is checked may be easily prevented.
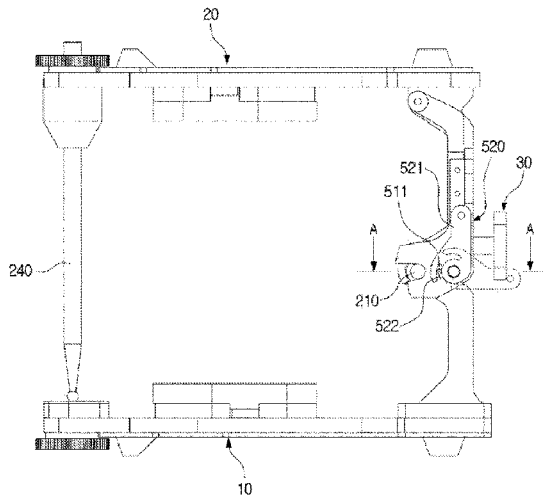
16 Claims, 19 Drawing Sheets