FIG. 1

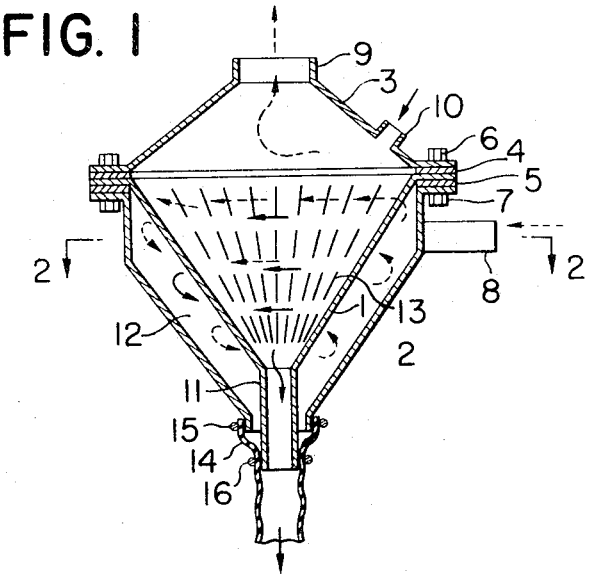

FIG. 2

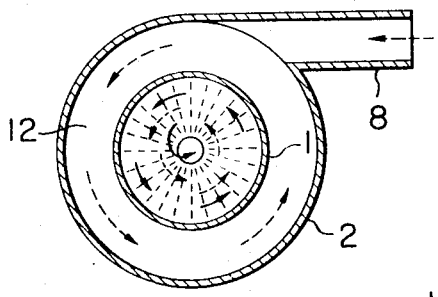

FIG. 3a

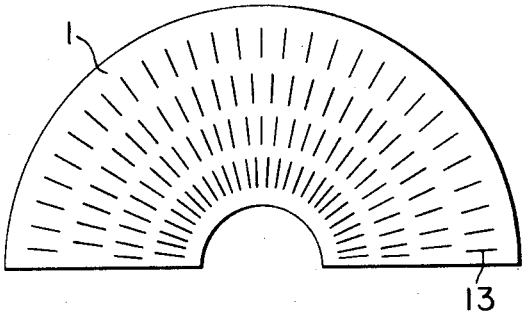

INVENTORS
KATSUTO OKADA
FUMIO KATO
BY
Kurt Kelman
AGENT