April 12, 1938. C. A. SABBAH ET AL 2,114,193

ELECTRIC VALVE CONVERTING SYSTEM

Filed April 16, 1937 2 Sheets-Sheet 1

Fig. 1.

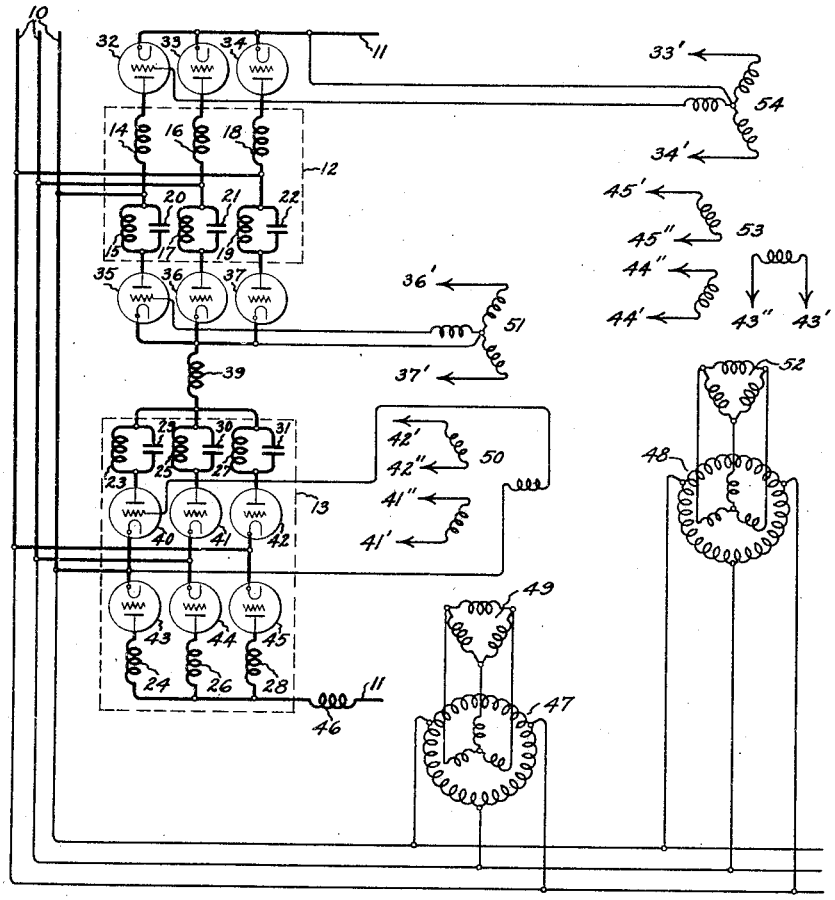

Fig. 1a.

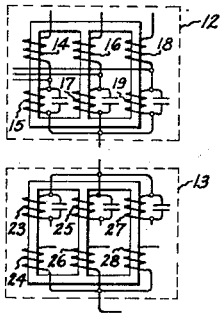

Inventors:
Camil A. Sabbah, Deceased.
by William A. Dodge, Administrator
Carl C. Herskind,
by Harry E. Dunkary
Attorney.