US009411293B2

(12) **United States Patent**
Nakajima et al.

(10) **Patent No.: US 9,411,293 B2**
(45) **Date of Patent: Aug. 9, 2016**

(54) **IMAGE FORMING APPARATUS WITH AUTOMATIC DOCUMENT FEEDER**

(71) Applicant: **CANON KABUSHIKI KAISHA**, Tokyo (JP)

(72) Inventors: **Yuki Nakajima**, Numazu (JP); **Masaru Aoki**, Numazu (JP); **Hiroto Endo**, Hadano (JP); **Daisuke Kaneko**, Suntou-gun (JP)

(73) Assignee: **Canon Kabushiki Kaisha**, Tokyo (JP)

(*) Notice: Subject to any disclaimer, the term of this patent is extended or adjusted under 35 U.S.C. 154(b) by 0 days.

(21) Appl. No.: **14/029,089**

(22) Filed: **Sep. 17, 2013**

(65) **Prior Publication Data**

US 2014/0079457 A1 Mar. 20, 2014

(30) **Foreign Application Priority Data**

Sep. 19, 2012 (JP) 2012-205856

(51) **Int. Cl.**
G03G 15/23 (2006.01)
B65H 15/00 (2006.01)
G03G 15/00 (2006.01)

(52) **U.S. Cl.**
CPC ***G03G 15/607*** (2013.01); ***G03G 15/6529*** (2013.01); *G03G 2215/00599* (2013.01); *G03G 2215/00928* (2013.01)

(58) **Field of Classification Search**
CPC G03G 2215/00928; G03G 2215/00177; G03G 15/6529; G03G 15/23; H04N 1/0461; H04N 1/00586; H04N 1/00572; H04N 1/00575; H04N 1/00578; H04N 1/0058; H04N 1/00596
USPC 399/363, 374
See application file for complete search history.

(56) **References Cited**

U.S. PATENT DOCUMENTS

5,369,480	A *	11/1994	Isobe	358/401
5,384,631	A *	1/1995	Matsunami	399/370
6,421,509	B1 *	7/2002	Nomura et al.	399/81
7,376,382	B2 *	5/2008	Shibata	399/401
2004/0126122	A1 *	7/2004	Kanamoto et al.	399/20
2006/0145414	A1 *	7/2006	Yokobori et al.	271/258.01
2009/0279149	A1 *	11/2009	Chen et al.	358/498

FOREIGN PATENT DOCUMENTS

JP	2000-185881 A		7/2000	
JP	2006016201 A	*	1/2006	B65H 29/60
JP	2006-232467 A		9/2006	
JP	2006232467 A	*	9/2006	B65H 85/00
JP	2007-033817 A		2/2007	
JP	2011-114845 A		6/2011	

* cited by examiner

Primary Examiner — Blake A Tankersley
Assistant Examiner — Ruben Parco, Jr.
(74) *Attorney, Agent, or Firm* — Canon USA, Inc. IP Division

(57) **ABSTRACT**

An image forming apparatus performs control to parallelly achieve document image reading by a reading unit and image formation by an image forming unit for forming on a recording material a document image read by the reading unit.
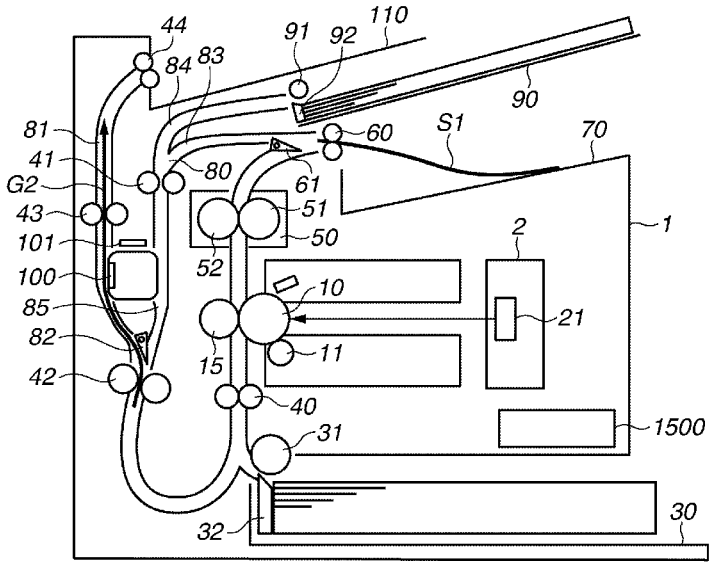
9 Claims, 23 Drawing Sheets