US009411193B2

(12) **United States Patent**
**Zhang et al.**

(10) **Patent No.: US 9,411,193 B2**
(45) **Date of Patent: Aug. 9, 2016**

(54) **BACKLIGHT MODULE AND DISPLAY DEVICE**

(71) Applicants: **BOE TECHNOLOGY GROUP CO., LTD.**, Beijing (CN); **BEIJING BOE DISPLAY TECHNOLOGY CO., LTD.**, Beijing (CN)

(72) Inventors: **Zhidan Zhang**, Beijing (CN); **Daekeun Yoon**, Beijing (CN); **Qing Ma**, Beijing (CN)

(73) Assignees: **BOE TECHNOLOGY GROUP CO., LTD.**, Beijing (CN); **BEIJING BOE DISPLAY TECHNOLOGY CO., LTD.**, Beijing (CN)

( * ) Notice: Subject to any disclaimer, the term of this patent is extended or adjusted under 35 U.S.C. 154(b) by 167 days.

(21) Appl. No.: **14/307,937**

(22) Filed: **Jun. 18, 2014**

(65) **Prior Publication Data**

US 2015/0241720 A1 Aug. 27, 2015

(30) **Foreign Application Priority Data**

Feb. 21, 2014 (CN) ..... 2014 1 0058893

(51) **Int. Cl.**
***G02F 1/1335*** (2006.01)
***G02F 1/1333*** (2006.01)

(52) **U.S. Cl.**
CPC .... ***G02F 1/133608*** (2013.01); ***G02F 1/133308*** (2013.01)

(58) **Field of Classification Search**
CPC ..... G02F 1/133308; G02F 1/1335; G02F 1/133504; G02F 1/133608; G02F 1/1333; G02F 1/13; G02F 1/133; G02F 1/133602; G02F 2001/133314; G02F 2001/133317; G02F 2001/13332; G02F 2201/46; G02F 2201/50; G02F 2201/503; G02F 2201/465; G02B 6/0021; F21V 15/01; F21V 17/00; F21V 21/00
USPC ..... 349/65, 58, 61, 62; 348/790, 794, 836; 362/611, 97.1, 613, 612, 97.2, 362, 362/633, 634, 97.3
See application file for complete search history.

(56) **References Cited**

U.S. PATENT DOCUMENTS

7,310,222 B2 * 12/2007 Bovio ..... G06F 1/1616 211/169
2002/0149713 A1 * 10/2002 Ishida ..... G02F 1/133608 349/58

(Continued)

FOREIGN PATENT DOCUMENTS

CN 1466004 A 1/2004
CN 102193219 A 9/2011

(Continued)

OTHER PUBLICATIONS

First Office Action regarding Chinese application No. 201410058893.5, dated Aug. 3, 2015. Translation provided by Dragon Intellectual Property Law Firm.

(Continued)

*Primary Examiner* — Thoi Duong
(74) *Attorney, Agent, or Firm* — Harness, Dickey & Pierce, P.L.C.

(57) **ABSTRACT**

The present invention relates to a backlight module for providing light to a liquid crystal panel and a display device. The backlight module comprises an optical membrane material arranged at a back surface of the liquid crystal panel, and a module frame surrounding the optical membrane material. An end surface of the module frame facing the liquid crystal panel is located at the back surface of the liquid crystal panel, and the module frame supports the liquid crystal panel through the end surface. The display device comprises a liquid crystal panel and the backlight module. According to the present invention, the end surface of the module frame facing the liquid crystal panel is located at the back surface of the liquid crystal panel. As a result, it is able to provide a very narrow end surface of the module frame, thereby to narrow a bezel of the display device.
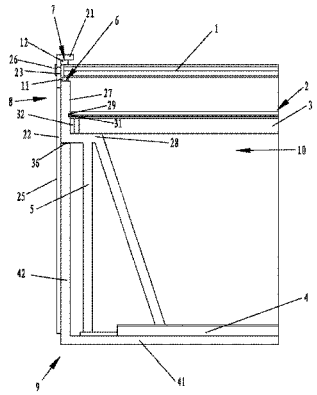
**15 Claims, 3 Drawing Sheets**