US009410393B2

(12) **United States Patent**
Larson et al.

(10) **Patent No.: US 9,410,393 B2**
(45) **Date of Patent: Aug. 9, 2016**

(54) **PRESSURE ASSISTED BLOWOUT PREVENTER**

(71) Applicant: **Hydril USA Manufacturing LLC**, Houston, TX (US)

(72) Inventors: **Eric Dale Larson**, Houston, TX (US); **Brian Scott Baker**, Houston, TX (US)

(73) Assignee: **Hydril USA Distribution LLC**, Houston, TX (US)

(*) Notice: Subject to any disclaimer, the term of this patent is extended or adjusted under 35 U.S.C. 154(b) by 0 days.

(21) Appl. No.: **14/104,898**

(22) Filed: **Dec. 12, 2013**

(65) **Prior Publication Data**

US 2015/0167417 A1 Jun. 18, 2015

(51) **Int. Cl.**

E21B 33/06	(2006.01)
E21B 7/12	(2006.01)
F15B 15/26	(2006.01)
E21B 29/12	(2006.01)
F16D 31/02	(2006.01)
E21B 29/00	(2006.01)
E21B 34/04	(2006.01)

(52) **U.S. Cl.**

CPC ***E21B 33/061*** (2013.01); ***E21B 33/062*** (2013.01); ***E21B 34/04*** (2013.01)

(58) **Field of Classification Search**

None

See application file for complete search history.

(56) **References Cited**

U.S. PATENT DOCUMENTS

1,854,058	A	4/1932	Otis	
3,743,013	A	7/1973	Harbonn	
3,933,338	A	1/1976	Herd et al.	
4,440,232	A *	4/1984	LeMoine	E21B 34/16 166/373
5,735,502	A	4/1998	Levett et al.	
6,164,619	A *	12/2000	Van Winkle	E21B 33/062 137/112
7,195,224	B2 *	3/2007	Le	F15B 15/261 251/1.3
7,628,207	B2 *	12/2009	Leonardi	E21B 33/038 166/344
2003/0024705	A1	2/2003	Whitby et al.	
2007/0137866	A1	6/2007	Ravensbergen et al.	
2012/0205561	A1	8/2012	Baugh	
2012/0279603	A1	11/2012	Swist	

FOREIGN PATENT DOCUMENTS

DE	2538640	A1	3/1977
KR	20130089460	A	8/2013

OTHER PUBLICATIONS

PCT Search Report and Written Opinion issued in connection with corresponding Application No. PCT/US2014/066534 on Mar. 26, 2015.

* cited by examiner

Primary Examiner — Matthew R Buck

Assistant Examiner — Douglas S Wood

(74) *Attorney, Agent, or Firm* — Bracewell LLP

(57) **ABSTRACT**

A blowout preventer (BOP) includes a pressure driven operator that is equipped with a balancing circuit to offset pressure inside the BOP. The operator, which is used to drive a ram, includes a piston, coupled to the ram by an operator arm, and a balance arm on a side of the piston opposite the operator arm. Pressure from inside the BOP communicates to an end of the balance arm opposite the piston and exerts a force to drive the ram radially inward.
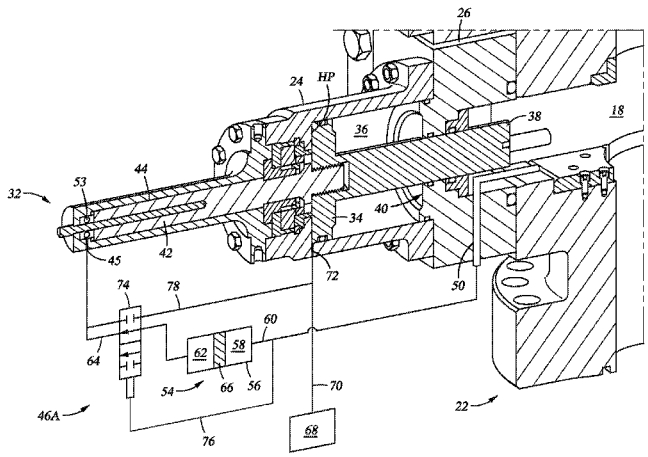
18 Claims, 5 Drawing Sheets