US009409693B2

(12) **United States Patent**
Chang et al.

(10) **Patent No.: US 9,409,693 B2**
(45) **Date of Patent: Aug. 9, 2016**

(54) **CARTON**

(71) Applicant: **AU Optronics Corporation**, Hsin-Chu (TW)

(72) Inventors: **Li-Wei Chang**, Hsin-Chu (TW); **Pei-Lun Chien**, Hsin-Chu (TW); **Hsin-Le Chen**, Hsin-Chu (TW)

(73) Assignee: **AU OPTRONICS CORPORATION**, Hsin-Chu (TW)

(*) Notice: Subject to any disclaimer, the term of this patent is extended or adjusted under 35 U.S.C. 154(b) by 0 days.

(21) Appl. No.: **14/265,818**

(22) Filed: **Apr. 30, 2014**

(65) **Prior Publication Data**

US 2014/0326621 A1 Nov. 6, 2014

(30) **Foreign Application Priority Data**

May 3, 2013 (CN) 2013 1 0160645

(51) **Int. Cl.**
B65D 81/26 (2006.01)
B01J 20/28 (2006.01)

(52) **U.S. Cl.**
CPC ***B65D 81/264*** (2013.01); ***B65D 81/268*** (2013.01); *B01J 20/2805* (2013.01); *B65D 81/26* (2013.01)

(58) **Field of Classification Search**
USPC 206/204, 484, 486, 213.1, 205; 422/305, 306; 96/147, 148; 428/178; 239/57, 51.5; 55/507, 513, 518
See application file for complete search history.

(56) **References Cited**

U.S. PATENT DOCUMENTS

1,032,319 A * 7/1912 Anthony G07D 9/004 206/0.83
2,452,957 A * 11/1948 Sabin A24F 15/18 239/34
2,524,162 A * 10/1950 Chavannes A23L 3/3418 206/204
2,789,369 A * 4/1957 Walker B65D 81/268 34/80
2,994,404 A * 8/1961 Schifferly 96/117.5
3,464,540 A * 9/1969 Stark 206/524

(Continued)

FOREIGN PATENT DOCUMENTS

CN 201647380 11/2010
CN 102991811 A 3/2013

(Continued)

Primary Examiner — J. Gregory Pickett
Assistant Examiner — Gideon Weinerth
(74) *Attorney, Agent, or Firm* — WPAT, PC; Justin King; Jonathan Chiang

(57) **ABSTRACT**

A moisture-absorbable carton includes a carton housing, a plurality of cushions disposed in the carton housing, and at least one moisture-absorbable spacer disposed in the carton housing. The moisture-absorbable spacer and a part of the cushions surround an inner surface of the carton housing for forming an accommodation space, wherein the accommodation space is for stowing at least one protected object. The moisture-absorbable spacer comprises a paper casing and at least one drier bag disposed in the paper casing.
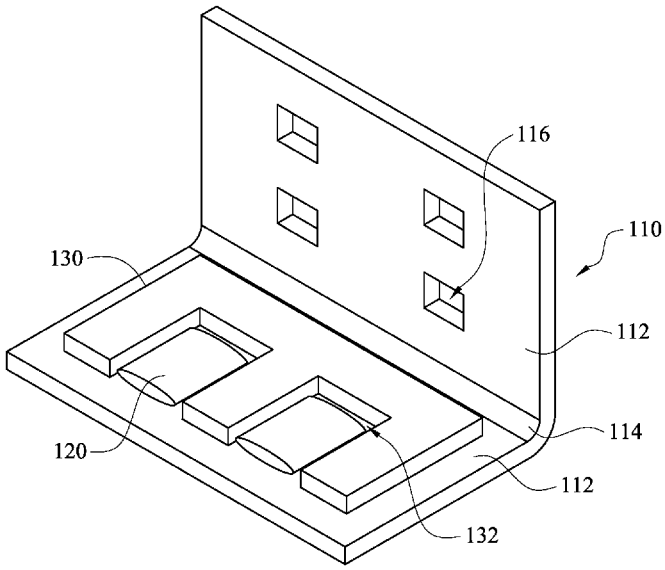
14 Claims, 5 Drawing Sheets