US009409393B2

(12) United States Patent
Martin et al.

(10) Patent No.: US 9,409,393 B2
(45) Date of Patent: Aug. 9, 2016

(54) **DETECTING A DRIVE BUBBLE FORMATION AND COLLAPSE**

(75) Inventors: **Eric T. Martin**, Corvallis, OR (US); **Andrew L. Van Brocklin**, Corvallis, OR (US); **David Maxfield**, Philomath, OR (US)

(73) Assignee: **HEWLETT-PACKARD DEVELOPMENT COMPANY, L.P.**, Houston, TX (US)

(*) Notice: Subject to any disclaimer, the term of this patent is extended or adjusted under 35 U.S.C. 154(b) by 29 days.

(21) Appl. No.: **14/372,729**

(22) PCT Filed: **Apr. 19, 2012**

(86) PCT No.: **PCT/US2012/034231**

§ 371 (c)(1),
(2), (4) Date: **Jul. 16, 2014**

(87) PCT Pub. No.: **WO2013/158103**

PCT Pub. Date: **Oct. 24, 2013**

(65) **Prior Publication Data**

US 2014/0333694 A1 Nov. 13, 2014

(51) **Int. Cl.**

B41J 29/393	(2006.01)
B41J 2/14	(2006.01)
B41J 2/045	(2006.01)
G01R 27/02	(2006.01)

(52) **U.S. Cl.**

CPC ***B41J 2/14153*** (2013.01); ***B41J 2/0451*** (2013.01); ***B41J 2/0458*** (2013.01); ***G01R 27/02*** (2013.01); *B41J 2002/14354* (2013.01)

(58) **Field of Classification Search**

CPC B41J 29/393; B41J 2/17546; B41J 2/0458; B41J 2/0451; B41J 2/2135

USPC 347/19

See application file for complete search history.

(56) **References Cited**

U.S. PATENT DOCUMENTS

5,633,678	A *	5/1997	Parulski et al.	348/231.5
8,011,748	B2	9/2011	North et al.	
2009/0040258	A1*	2/2009	Baek	347/17
2011/0084997	A1*	4/2011	Chen	B41J 2/14153 347/14

FOREIGN PATENT DOCUMENTS

JP	11-334102	A	12/1999
JP	2005-199600	A	7/2005
JP	2007-210296	A	8/2007

* cited by examiner

Primary Examiner — Manish S Shah
Assistant Examiner — Yaovi M Ameh
(74) *Attorney, Agent, or Firm* — Fabian Van Cott

(57) **ABSTRACT**

Measuring an inkjet nozzle may include taking at least one impedance measurement after the firing command is sent to detect the presence of a drive bubble and taking another impedance measurement to detect a collapse of the drive bubble.
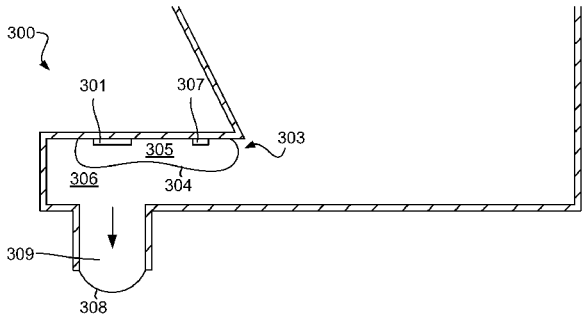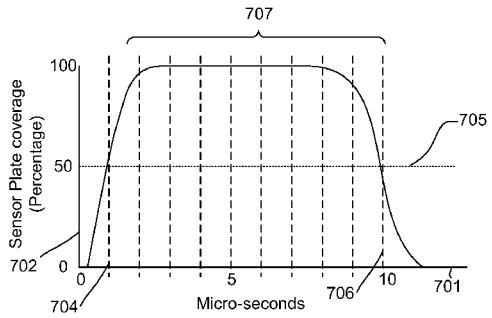
20 Claims, 6 Drawing Sheets