US006707293B2

(12) **United States Patent**
Wan et al.

(10) **Patent No.: US 6,707,293 B2**
(45) **Date of Patent: Mar. 16, 2004**

(54) **360-DEGREE ROTARY POSITION SENSOR HAVING A MAGNETORESISTIVE SENSOR AND A HALL SENSOR**

(75) Inventors: **Hong Wan**, Plymouth, MN (US); **Tamara Bratland**, Plymouth, MN (US)

(73) Assignee: **Honeywell International Inc.**, Morristown, NJ (US)

(*) Notice: Subject to any disclaimer, the term of this patent is extended or adjusted under 35 U.S.C. 154(b) by 39 days.

(21) Appl. No.: **10/002,454**

(22) Filed: **Nov. 15, 2001**

(65) **Prior Publication Data**

US 2003/0090265 A1 May 15, 2003

(51) **Int. Cl.**[7] **G01B 7/30**; G01R 33/06

(52) **U.S. Cl.** **324/207.25**; 324/207.2; 324/207.21; 324/207.14

(58) **Field of Search** ..... 324/225, 207.12, 324/207.2, 207.21, 235, 207.23, 207.25, 207.14; 338/32 H, 32 R

(56) **References Cited**

U.S. PATENT DOCUMENTS

4,283,679 A		8/1981	Ito et al.	324/165
4,712,064 A	*	12/1987	Eckardt et al.	324/207.12
4,728,950 A		3/1988	Hendrickson	
5,497,082 A	*	3/1996	Hancock	324/207.14
5,736,852 A	*	4/1998	Pattantyus	324/166
5,880,586 A	*	3/1999	Dukart et al.	324/207.2
6,064,197 A		5/2000	Lockmann et al.	324/207.14
6,198,275 B1	*	3/2001	Wolf et al.	324/207.12
6,212,783 B1	*	4/2001	Ott et al.	33/1 PT
6,326,781 B1	*	12/2001	Kunde et al.	324/207.21
6,355,998 B1	*	3/2002	Schob et al.	310/68 B

OTHER PUBLICATIONS

Schodlbauer, Dieter, "An Absolute Encoding, Magnetoresistive Multi–Turn Angular Position Sensor" Presented at Sensor 2001, May 8–10, 2001, Exhibition Centre, Nuremberg, Germany.

* cited by examiner

Primary Examiner—N. Le
Assistant Examiner—Reena Aurora
(74) *Attorney, Agent, or Firm*—McDonnell Boehnen Hulbert & Berghoff

(57) **ABSTRACT**

By combining outputs from a Hall sensor and a magnetoresistive (MR) sensor, a 360-degree rotary position sensor can be achieved. The Hall sensor and the MR sensor both detect a magnetic field produced by a magnet. The Hall sensor detects the polarity of the magnetic field, while the MR sensor detects the angular position of the magnetic field, up to 180-degrees. With a positive output from the Hall sensor, the first 180-degrees of the angular position is detected. With a negative output from the Hall sensor, the second 180-degrees of the angular position is detected.
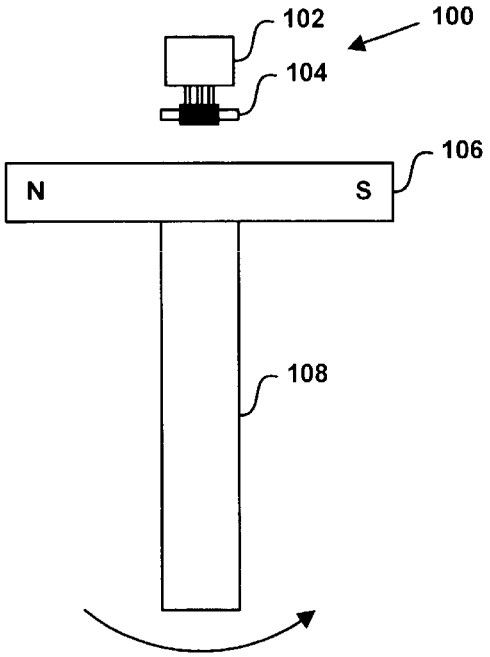
32 Claims, 4 Drawing Sheets