US007106293B2

(12) **United States Patent**
Pirhonen

(10) **Patent No.: US 7,106,293 B2**
(45) **Date of Patent: Sep. 12, 2006**

(54) **LIGHTING CONTROL METHOD AND ELECTRONIC DEVICE**

(75) Inventor: **Risto Pirhonen**, Tampere (FI)

(73) Assignee: **Nokia Corporation**, Espoo (FI)

(*) Notice: Subject to any disclaimer, the term of this patent is extended or adjusted under 35 U.S.C. 154(b) by 422 days.

(21) Appl. No.: **10/294,220**

(22) Filed: **Nov. 14, 2002**

(65) **Prior Publication Data**

US 2003/0095093 A1 May 22, 2003

(30) **Foreign Application Priority Data**

Nov. 19, 2001 (FI) 20012246

(51) **Int. Cl.**
G09G 3/36 (2006.01)
G02F 1/1335 (2006.01)

(52) **U.S. Cl.** **345/102**; 349/61

(58) **Field of Classification Search** 345/204, 345/205, 207, 87–102, 76, 82, 83; 349/60–71
See application file for complete search history.

(56) **References Cited**

U.S. PATENT DOCUMENTS

5,384,577 A 1/1995 McLaughlin et al.
5,490,005 A * 2/1996 Jueliger 349/116
5,760,760 A * 6/1998 Helms 345/102
5,818,553 A * 10/1998 Koenck et al. 349/61
5,933,089 A * 8/1999 Katada 340/7.55
6,447,132 B1 * 9/2002 Harter, Jr. 362/29
2002/0050974 A1 * 5/2002 Rai et al. 345/102

FOREIGN PATENT DOCUMENTS

EP	1 085 731		3/2001
EP	1 107 222		6/2001
EP	1 202 243		5/2002
JP	6130386	*	5/1994
JP	06130386		5/1994
JP	11282404	*	10/1999
WO	WO 99/23456		5/1999

* cited by examiner

Primary Examiner—Alexander Eisen
(74) *Attorney, Agent, or Firm*—Hollingsworth & Funk, LLC

(57) **ABSTRACT**

A lighting control method and an electronic device. The lighting of the display of the device can be adjusted according to ambient lighting. Information on the ambient lighting is transmitted to a light-sensitive component of the device through a light guide that is integrated as part of a protective display window.
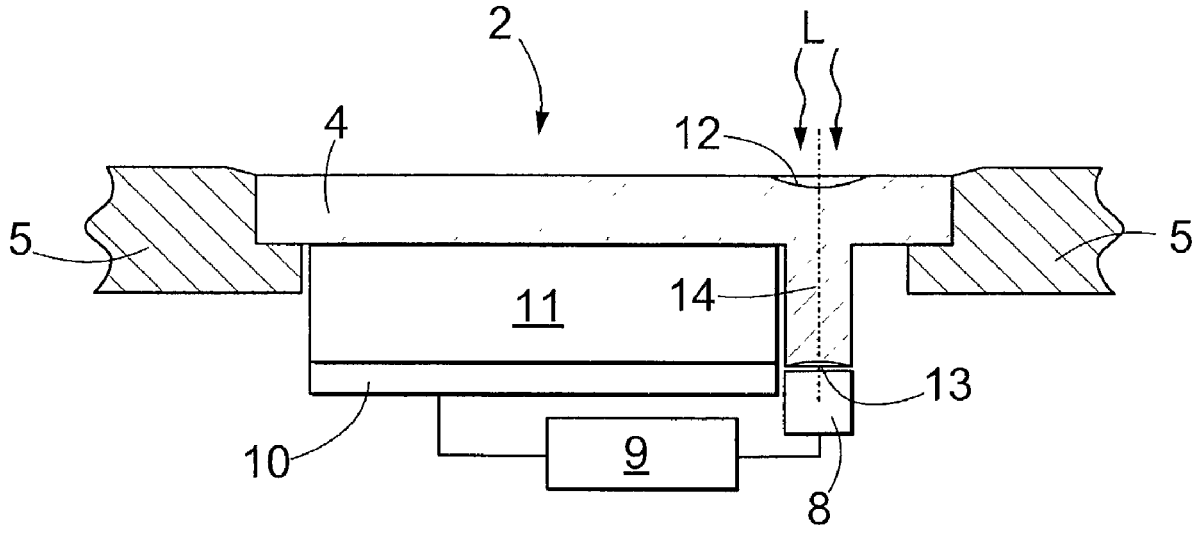
15 Claims, 1 Drawing Sheet