United States Patent [19]

Janssen

[11] **4,191,792**

[45] **Mar. 4, 1980**

[54] **PAINT ROLLER**

[75] Inventor: **Robert I. Janssen**, St. Paul, Minn.

[73] Assignee: **Padco, Inc.**, Minneapolis, Minn.

[21] Appl. No.: **955,918**

[22] Filed: **Oct. 30, 1978**

[51] **Int. Cl.**[2] **B05D 5/02**; B05C 17/02; B05D 1/28

[52] **U.S. Cl.** **427/260**; 15/230.11; 29/120; 427/428; 428/36; D4/38.1

[58] **Field of Search** 15/230.11; 29/120; D4/38.1; 428/36; 427/260, 420

[56] **References Cited**

U.S. PATENT DOCUMENTS

D. 241,274	8/1976	Hori	D4/38.1
D. 241,374	9/1976	Hori	D4/38.1
D. 241,375	9/1976	Hori	D4/38.1
2,234,761	3/1941	Harpootlian	15/230.11
2,368,513	1/1945	Adams	15/230.11
2,778,050	1/1957	Meinhardt	15/230.11
2,824,326	2/1958	Ames	29/120
3,226,799	1/1966	Grodberg et al.	29/120
3,837,988	9/1974	Hennen et al.	429/91
3,955,260	5/1976	Sherden	15/230.11
4,103,450	8/1978	Whitcomb	428/288
4,105,816	8/1978	Hori	427/260

FOREIGN PATENT DOCUMENTS

1247373 9/1971 United Kingdom .

Primary Examiner—William R. Dixon, Jr.
Attorney, Agent, or Firm—Kinney, Lange, Braddock, Westman and Fairbairn

[57] **ABSTRACT**

A paint roller for producing texture paint surfaces having a cylindrical core with a paint applying and texturing cover bonded to the outer surface of the cylindrical core. The paint applying and texturing cover is an open web of interengaged continuous crinkled coarse filaments of resilient material. The open loops of the open web carry the texture paint material, apply it to the surface being painted, and texture it in essentially a single motion. During application, the loop elements are actually immersed in the texture paint material and lift it into peaks, thereby producing deeper textures than has generally been possible in the past.
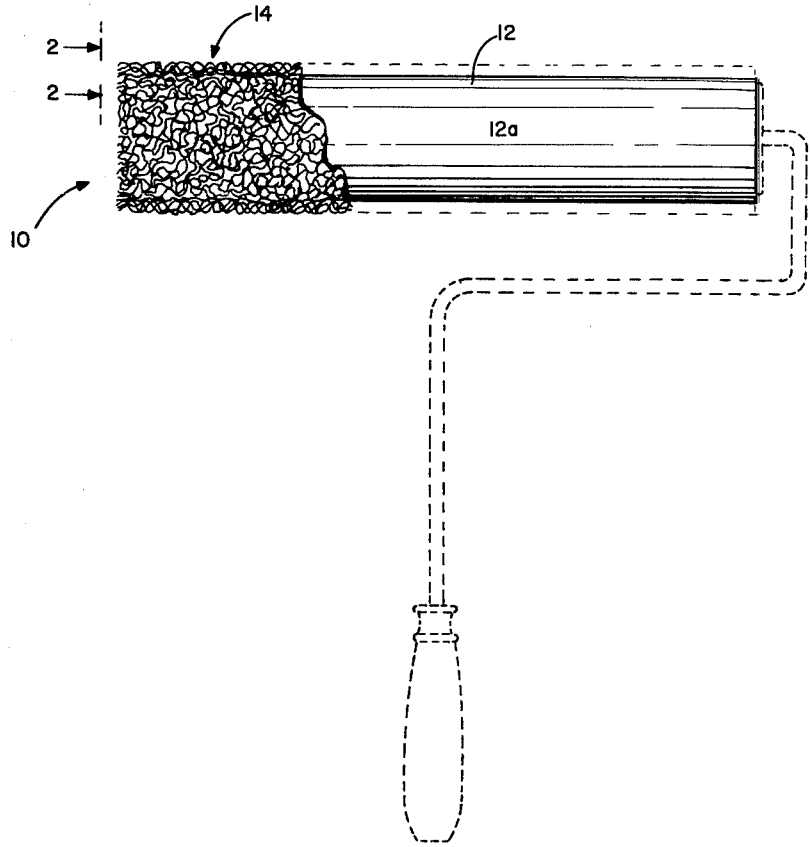
15 Claims, 4 Drawing Figures