United States Patent [19]

Haven

[11] **Patent Number: 4,572,592**

[45] **Date of Patent: Feb. 25, 1986**

[54] **REMOVABLE DISPLAY SCREEN BEZEL**

[75] Inventor: **Kenneth R. Haven**, Fremont, Calif.

[73] Assignee: **Hewlett-Packard Company**, Palo Alto, Calif.

[21] Appl. No.: **628,882**

[22] Filed: **Jul. 9, 1984**

[51] **Int. Cl.**[4] **A47B 81/06**; H04N 5/645

[52] **U.S. Cl.** **312/7.2**; 358/248; 358/254

[58] **Field of Search** ..... 358/248, 254, 249; 312/7.2, 257 A

[56] **References Cited**

U.S. PATENT DOCUMENTS

2,870,438	1/1959	Solheim	358/248
3,294,905	12/1966	Jonassen	312/7.2
3,703,323	11/1972	Gallas et al.	312/7.2
4,063,289	12/1977	Veenendall	358/248

Primary Examiner—Edward L. Coles, Sr.
Attorney, Agent, or Firm—Jeffery B. Fromm

[57] **ABSTRACT**

An easily removable video display bezel for facilitating the easy and quick removal of the bezel from the display screen. The bezel, when attached, fits tightly around the display screen and serves to frame the image on the screen.
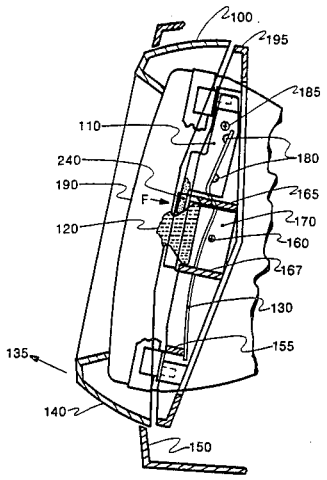
10 Claims, 8 Drawing Figures