US008072392B2

(12) **United States Patent**
Lection

(10) **Patent No.: US 8,072,392 B2**
(45) **Date of Patent: Dec. 6, 2011**

(54) **INTEGRATED DISPLAY SYSTEM FOR A COMPUTER AND A PORTABLE DEVICE**

(75) Inventor: **David B. Lection**, Raleigh, NC (US)

(73) Assignee: **Scenera Technologies, LLC**, Portsmouth, NH (US)

(*) Notice: Subject to any disclaimer, the term of this patent is extended or adjusted under 35 U.S.C. 154(b) by 900 days.

(21) Appl. No.: **11/952,412**

(22) Filed: **Dec. 7, 2007**

(65) **Prior Publication Data**

US 2009/0146909 A1 Jun. 11, 2009

(51) **Int. Cl.**
G09G 5/00 (2006.01)
G06F 1/16 (2006.01)
H05K 7/16 (2006.01)

(52) **U.S. Cl.** **345/1.1**; 345/4; 345/156; 361/679.04; 361/727

(58) **Field of Classification Search** 345/1.1–1.2, 345/2.1–3.1, 4–6, 30, 55, 76–80, 84; 361/679.04, 361/679.29, 724–727
See application file for complete search history.

(56) **References Cited**

U.S. PATENT DOCUMENTS

6,489,932 B1 * 12/2002 Chitturi et al. 345/30
6,744,623 B2 6/2004 Numano et al.
6,757,551 B2 6/2004 Newman et al.
6,919,864 B1 * 7/2005 Macor 345/1.1
6,967,665 B2 11/2005 Ishikawa et al.
7,139,529 B2 11/2006 Rekimoto et al.
7,221,331 B2 5/2007 Bear et al.
2003/0103088 A1 * 6/2003 Dresti et al. 345/835
2003/0176214 A1 9/2003 Burak et al.
2004/0192430 A1 9/2004 Burak et al.
2004/0223061 A1 * 11/2004 Bear et al. 348/207.99
2006/0007051 A1 * 1/2006 Bear et al. 345/1.1
2006/0048286 A1 3/2006 Donato
2006/0238439 A1 10/2006 Fuller et al.
2006/0238497 A1 * 10/2006 Velagapudi 345/156
2007/0010289 A1 1/2007 Mezue

* cited by examiner

Primary Examiner — Lun-Yi Lao
Assistant Examiner — Jarurat Suteerawongsa

(57) **ABSTRACT**

A display-based device includes a display assembly having a first viewing portion and a second viewing portion within the first viewing portion and a docking station that removably docks a portable device having an imaging apparatus that includes a display apparatus and/or an image capture apparatus. When docked, the portable device's imaging apparatus is positioned facing a rear side of the second viewing portion. The display-based device operates in a first mode, where data from the display-based device is displayed in the second viewing portion and backlighting for the second viewing portion is provided by the portable device, and operates in a second mode, where the second viewing portion is substantially transparent so that the display apparatus of the portable device can display data through the second viewing portion and/or the image capture apparatus can capture images through the second viewing portion.
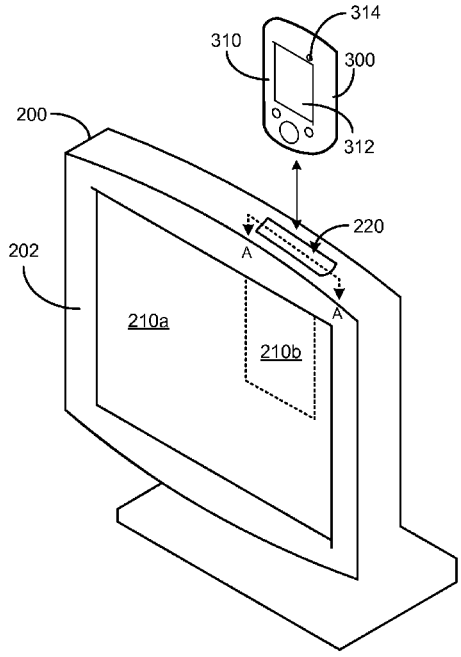
24 Claims, 7 Drawing Sheets