FIG.1
Prior Art

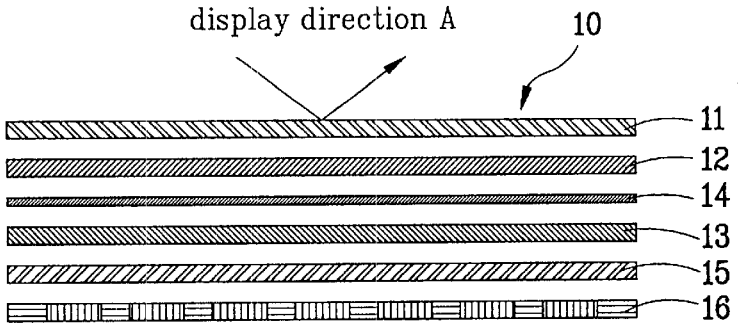
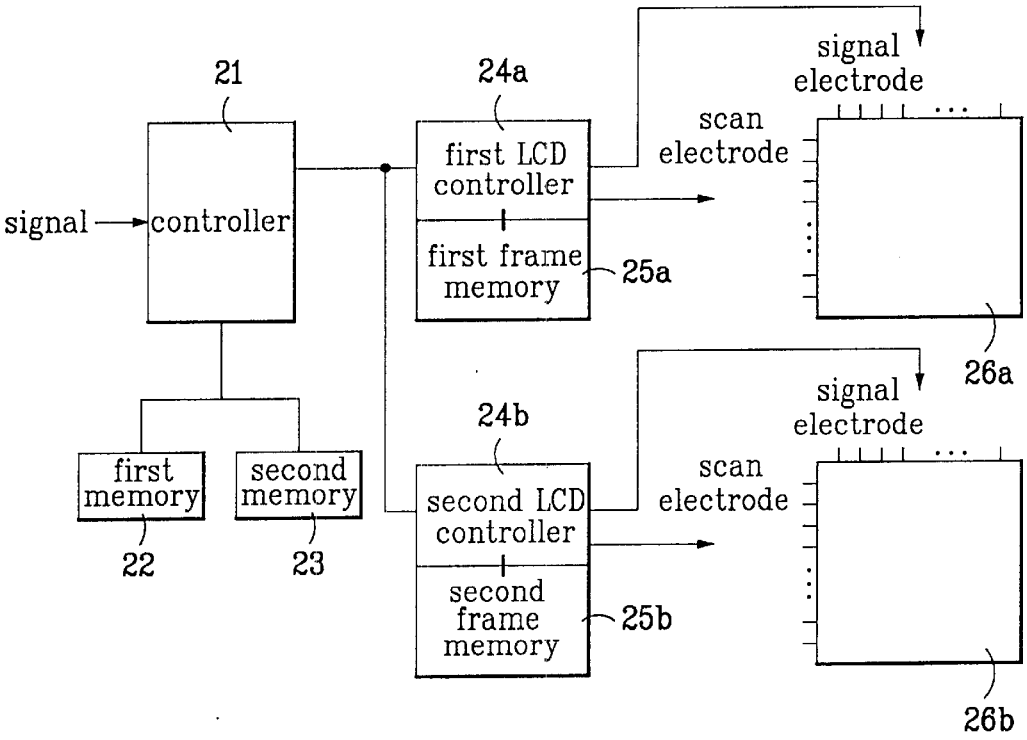
FIG.2
Prior Art