United States Patent [19]

Ballu

[11] **3,966,092**

[45] **June 29, 1976**

[54] **MANUALLY OPERATED MAN-PORTABLE SPRAYER**

[75] Inventor: **Vincent Pierre Marie Ballu,** Epernay, France

[73] Assignee: **Tecnoma,** Epernay, France

[22] Filed: **Sept. 15, 1975**

[21] Appl. No.: **613,234**

[30] **Foreign Application Priority Data**

Sept. 17, 1974 France 74.31341

[52] **U.S. Cl.** **222/175;** 239/153; 239/154; 239/331

[51] **Int. Cl.**[2] **B67D 5/64;** B05B 9/08; B05B 11/00

[58] **Field of Search** 222/175, 179; 239/331, 239/332, 333, 334, 152–154

[56] **References Cited**

FOREIGN PATENTS OR APPLICATIONS

137,030	4/1950	Australia	239/153
616,365	2/1961	Italy	239/153
23,541	1911	United Kingdom	239/152
1,136,513	12/1968	United Kingdom	239/154

Primary Examiner—Robert S. Ward, Jr.
Attorney, Agent, or Firm—Gordon W. Hueschen

[57] **ABSTRACT**

The invention relates to a manually operated man-portable sprayer comprising a reciprocating pump the body of which extends through the upper wall of the reservoir, through which it can be caused to slide by a side-mounted actuating lever, said pump being disposed centrally in relation to the reservoir. Force is transmitted from the actuating lever to the pump body by a stirrup-shaped two-branch connecting-rod having its top hingedly connected to the pump body and co-extensive therewith, and its two branches partially engaging into undercut reinforcing grooves formed in the reservoir wall on either side of and adjacent to the location of the pump body.
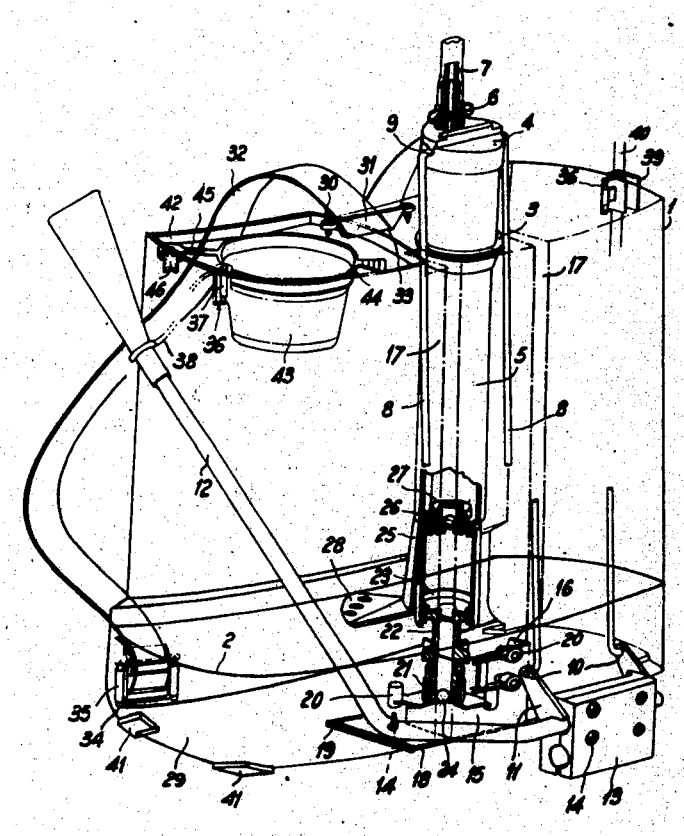
5 Claims, 1 Drawing Figure