US005463492A

United States Patent [19]

Check, III

[11] **Patent Number: 5,463,492**

[45] **Date of Patent: Oct. 31, 1995**

[54] **LIGHT MODULATING FILM OF IMPROVED CLARITY FOR A LIGHT VALVE**

[75] Inventor: **Joseph A. Check, III**, West Bayshore, N.Y.

[73] Assignee: **Research Frontiers Incorporated**, Woodbury, N.Y.

[21] Appl. No.: **972,830**

[22] Filed: **Nov. 6, 1992**

Related U.S. Application Data

[63] Continuation-in-part of Ser. No. 786,511, Nov. 1, 1991, abandoned.

[51] **Int. Cl.**[6] **G02B 26/00**

[52] **U.S. Cl.** **359/296**; 252/583

[58] **Field of Search** 359/296, 52; 252/582, 252/583, 585

[56] **References Cited**

U.S. PATENT DOCUMENTS

3,257,903	6/1966	Marks	359/296
3,341,274	9/1967	Marks	359/296
4,025,163	5/1977	Saxe et al.	359/296
4,078,856	3/1978	Thompson et al.	359/296
4,164,365	8/1979	Saxe	359/296
4,247,175	1/1981	Saxe	359/296
4,407,565	10/1983	Saxe	359/296
4,422,963	12/1983	Thompson et al.	359/296
4,435,047	3/1984	Fergason	359/52
4,579,423	4/1986	Fergason	359/52
4,616,903	10/1986	Fergason	359/52
4,657,349	4/1987	Labes et al.	359/296
4,685,771	8/1987	West et al.	359/46
4,919,521	4/1990	Tada et al.	359/296
5,211,877	5/1993	Andrejewski et al.	252/299.01
5,223,959	6/1993	Wu et al.	359/52

FOREIGN PATENT DOCUMENTS

350354	1/1990	European Pat. Off. .
551138	1/1993	European Pat. Off. .
63-82191	5/1988	Japan .
63-30325	12/1988	Japan .
64-38732	2/1989	Japan .
64-57242	3/1989	Japan .
1126629	5/1989	Japan .
2232630	9/1990	Japan .
1306981	6/1973	United Kingdom .
1468768	8/1977	United Kingdom .

OTHER PUBLICATIONS

P. S. Drazaic, J. Appl. Phys. 60(6), 2142–2148 (1986).

T. Kajiyama et al, Progress In Pacific Polymer Science, pp. 343–345, 348, Springer–Verlag, Berlin (1991).

Primary Examiner—Georgia Y. Epps
Assistant Examiner—Thomas Robbins
Attorney, Agent, or Firm—Rosenman & Colin

[57] **ABSTRACT**

A film suitable for use as the light modulating unit of a light valve comprises a cross-linked polymer matrix having droplets of a liquid light valve suspension distributed in the cross-linked polymer matrix, and a light valve comprising such a film.
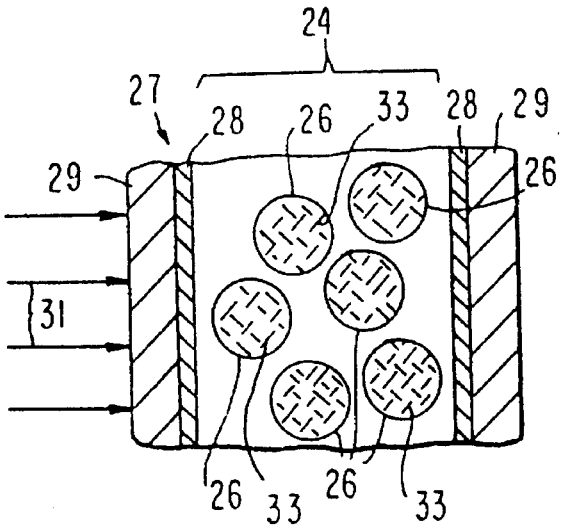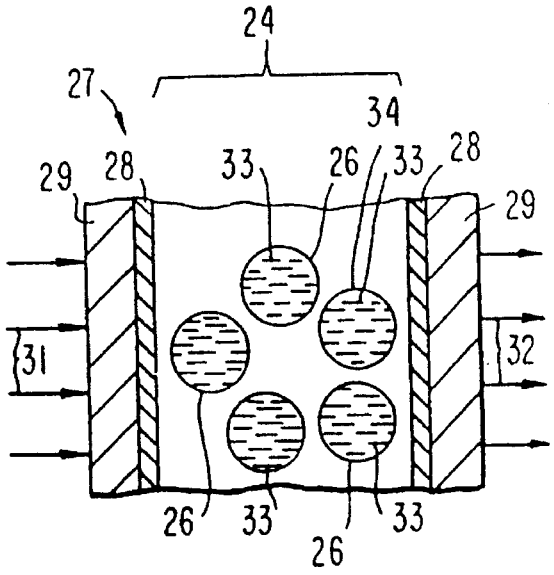
28 Claims, 1 Drawing Sheet