US00D349892S

United States Patent [19]

Nakaizumi

[11] Patent Number: Des. 349,892

[45] Date of Patent: ** Aug. 23, 1994

[54] **CASE FOR AN OPTICAL DISC CARTRIDGE**

[75] Inventor: **Hiroshi Nakaizumi**, Tokyo, Japan

[73] Assignee: **Sony Corporation**, Tokyo, Japan

[**] Term: **14 Years**

[21] Appl. No.: **870,311**

[22] Filed: **Apr. 17, 1992**

[30] **Foreign Application Priority Data**

Nov. 21, 1991 [JP] Japan 3-35121

[52] **U.S. Cl.** **D14/114**

[58] **Field of Search** 360/60, 132–133, 360/135, 97.01–99.12; 206/312, 444; D3/30.1, 35; D14/114, 100, 107

[56] **References Cited**

U.S. PATENT DOCUMENTS

D. 220,597 4/1971 Dawson et al. D3/35
D. 271,349 11/1983 Thiele ..... D3/30.1 X
D. 278,242 4/1985 Saito D14/114
D. 307,893 5/1990 Kato et al. D14/114
D. 321,429 11/1991 Kojo D3/35
3,860,248 6/1975 Hunt et al. 206/444

Primary Examiner—Wallace R. Burke
Assistant Examiner—M. H. Tung
Attorney, Agent, or Firm—Lewis H. Eslinger; Jay H. Maioli

[57] **CLAIM**

The ornamental design for a case for an optical disc cartridge, as shown and described.

DESCRIPTION
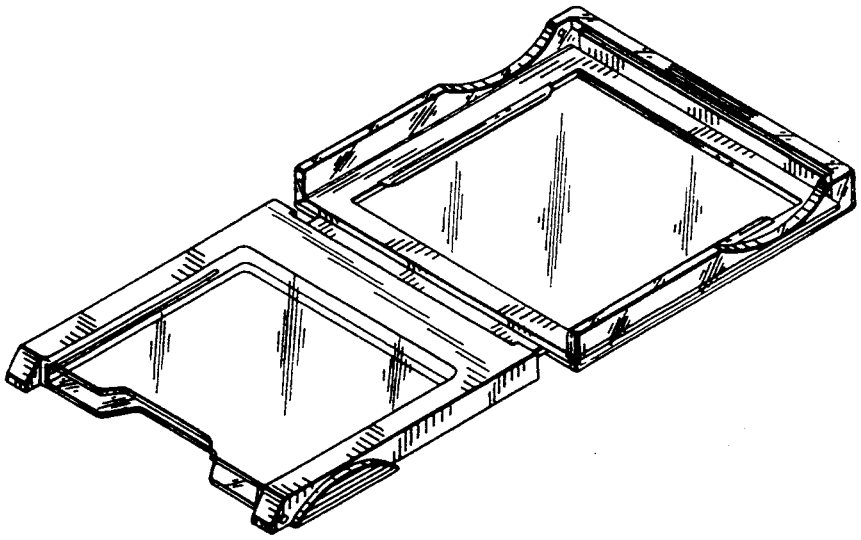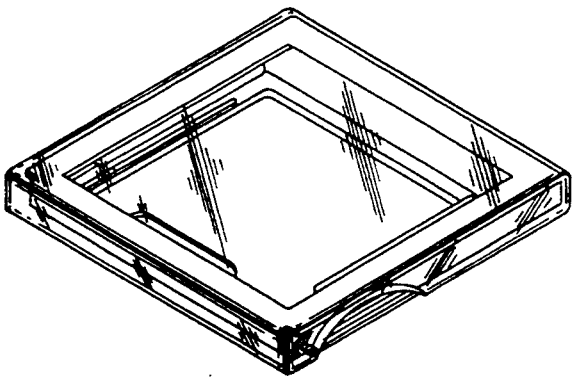
FIG. **1** is a top plan view of a case for an optical disc cartridge showing my new design;
FIG. **2** is a front elevational view thereof;
FIG. **3** is a right-side elevational view thereof, the left side being a mirror image thereof;
FIG. **4** is a rear elevational view thereof;
FIG. **5** is a bottom plan view thereof;
FIG. **6** is a top, front and right-side perspective view thereof, shown in the open position; and,
FIG. **7** is a top, front and right-side perspective view thereof.