US005444192A

United States Patent [19]

Shetye et al.

[11] Patent Number: 5,444,192

[45] Date of Patent: Aug. 22, 1995

[54] INTERACTIVE DATA ENTRY APPARATUS

[75] Inventors: **Mohan S. Shetye**, E. Amherst; **Paul E. Boden**, Blasdell, both of N.Y.

[73] Assignee: **Integral Information Systems**, Amherst, N.Y.

[21] Appl. No.: **84,472**

[22] Filed: **Jul. 1, 1993**

[51] **Int. Cl.**[6] **G08C 21/00**

[52] **U.S. Cl.** **178/18**

[58] **Field of Search** 198/18, 19; 364/709.01, 364/709.02, 709.04, 709.11; 341/20, 31, 32, 33; 345/179

[56] **References Cited**

U.S. PATENT DOCUMENTS

3,395,963	8/1968	Ackerman	250/569
4,077,036	2/1978	Avakian et al.	341/20
4,295,051	10/1981	Graf et al.	250/569
4,475,239	10/1984	Van Raamsdonk	349/179
4,628,408	12/1986	Kimura	361/395
4,656,317	4/1987	Tusgei et al.	178/18
4,725,694	2/1988	Auer et al.	178/18
4,773,032	9/1988	Uehara et al.	364/709.04
4,866,646	9/1989	Nakamura et al.	364/709.11
4,879,557	11/1989	Roche	341/23
4,916,441	4/1990	Gombrich	345/169
4,916,740	4/1990	Noda et al.	382/59
4,991,091	2/1991	Allen	364/413.02
5,006,699	4/1991	Felkner et al.	235/472
5,049,862	9/1991	Dao et al.	345/179
5,065,315	11/1991	Garcia	364/413.01
5,077,666	12/1991	Brimm et al.	364/413.02
5,171,977	12/1992	Morrison	235/375
5,191,329	3/1993	Samreus	341/20

Primary Examiner—Stephen Chin
Assistant Examiner—Kevin Kim
Attorney, Agent, or Firm—Baker & Botts

[57] **ABSTRACT**

An interactive data entry apparatus to accept, translate, store, and transmit data entered via a paper data entry form and to simultaneously create a written and magnetic or other computer data record. The apparatus has a digitizer upon which a data entry form is placed and a clip which holds the form in place. The digitizer determines the type of form, generates a data entry area corresponding to the form, and accepts check-marks and alpha-numeric data. The apparatus also has a microprocessor for storing appropriate data or commands; a stylus; a display to provide visual feedback of entered data; a speaker to provide audio feedback; batteries and wireless communication device to allow portability; and memory and communication ports to provide additional capabilities including communications with a central processor and enhanced local memory capacity. Commands may be entered or activated in the processor be selecting various function keys through holes in the clip's transparent surface. Further, the apparatus may include an access limiting device to ensure the proper authorship of the data entered.
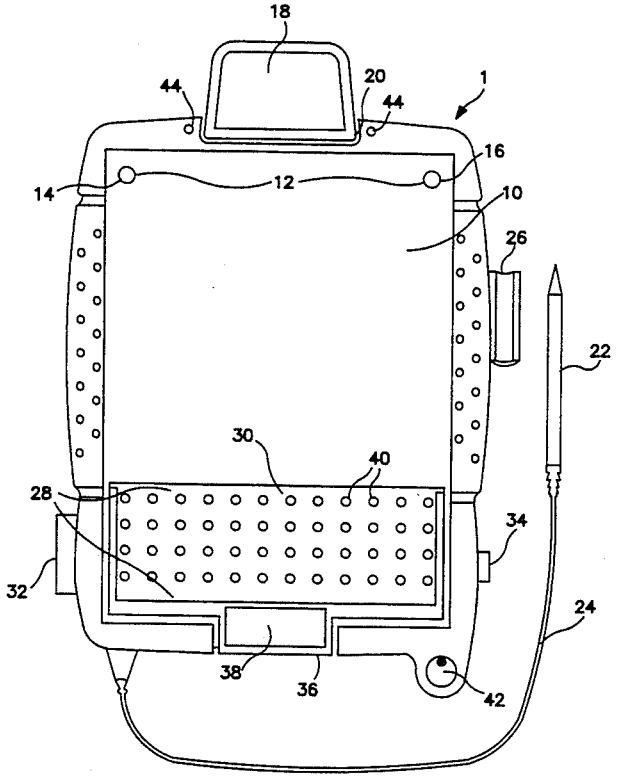
44 Claims, 7 Drawing Sheets