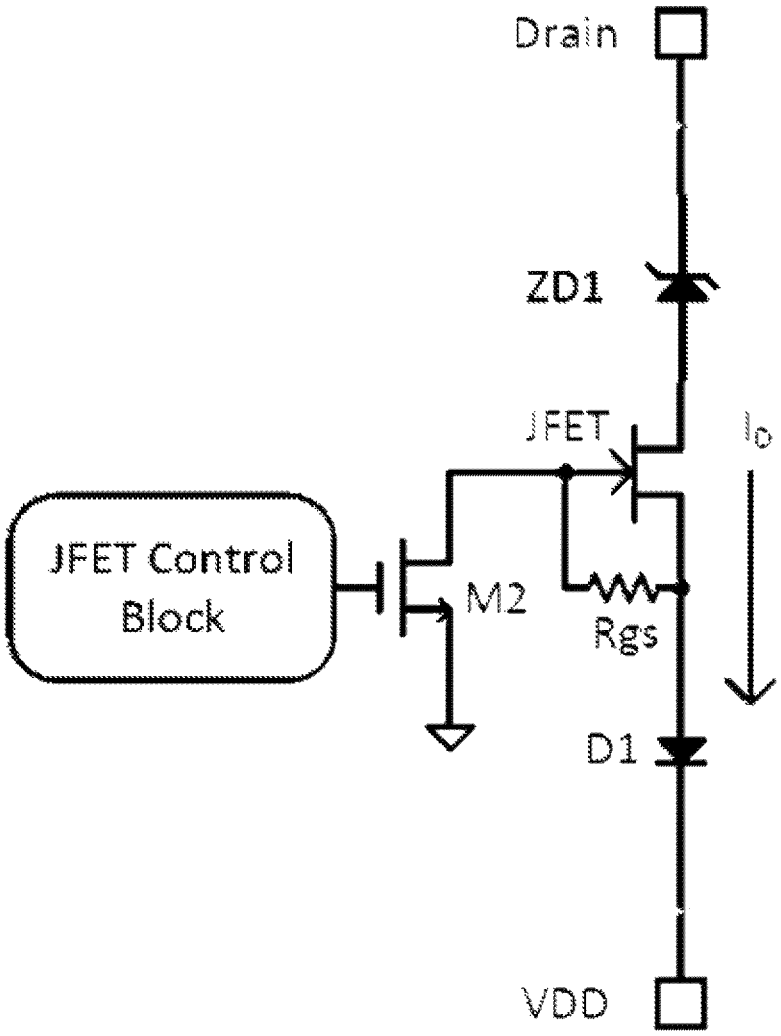

FIG. 4
(prior art)